Table of Contents

Maris Habitats ... 5
Abstract ... 5
Glossary ... 6
1. Introduction ... 7
1.1 Presentation ... 7
1.2 Motivation ... 8
1.3 Product ... 9
1.4 Problem ... 9
1.5 Objectives ... 10
1.6 Requirements ... 10
1.6.1 Functional Requirements ... 11
1.6.2 Non-Functional Requirements ... 11
1.7 Tests ... 12
1.8 Report Structure ... 12
2. Background and Related Work ... 13
2.1 Introduction ... 13
2.2 Concepts ... 13
2.3 Companies ... 18
2.4 Comparative Analysis ... 22
2.5 Materials ... 24
2.5.1. Structural Materials ... 24
2.5.2 Sensor Placements ... 28
2.5.3 Biologic and Geographical analysis ... 29
2.6 Summary ... 30
3. Project Management ... 30
3.1 Introduction ... 30
3.2 Scope ... 30
3.3 Time ... 32
3.4 Cost ... 33
3.5 Quality ... 37
3.6 People ... 38
3.7 Stakeholder Management ... 40
3.8 Communications ... 42
3.9 Risk ... 45
3.10 Procurement ... 46
3.11 Project Plan ... 47
3.11.1 Gantt Chart ... 47
3.11.2 Global Sprint ... 48
3.11.3 Backlog ... 48
3.11.4 Initial Sprint Plan ... 49
3.12 Sprint Outcomes ... 50
3.13 Sprint Evaluations ... 58
3.14 Summary ... 62
4. Marketing Plan ... 63
4.1 Introduction ... 63
4.2 Business Idea Formulation ... 63
4.3 Business Model Canvas ... 64
4.4 Market Analysis ... 66

4.4.1 PESTEL Analysis ... 67
4.4.2 SWOT Analysis ... 69
4.5 Strategy ... 71
4.5.1 Strategic Objectives ... 71
4.5.2 Segmentation and Targeting ... 71
4.5.3 Positioning ... 72
4.5.4 Marketing-Mix ... 74
4.5.5 Brand ... 77
4.6 Marketing Programs ... 78
4.6.1 Programs ... 78
4.6.2 Budget ... 78
4.6.3 Control ... 79
4.7 Summary ... 79
5. Eco-efficiency Measures for Sustainability ... 80
5.1 Introduction ... 80
5.2 Environmental ... 80
5.3 Economic ... 82
5.4 Social ... 82
5.5 Life Cycle Analysis ... 83
5.6 Summary ... 83
6. Ethical and Deontological Concerns ... 84
6.1 Introduction ... 84
6.2 Engineering Ethics ... 84
6.3 Sales and Marketing Ethics ... 85
6.4 Environmental Ethics ... 85
6.5 Liability ... 86
6.6 Summary ... 87
7. Project Development ... 88
7.1 Introduction ... 88
7.2 Ideation ... 88
7.3 Concept ... 89
7.4 Design ... 91
7.4.1 Introduction ... 91
7.4.2 Design ... 91
7.4.3 Structure ... 92
7.5 Smart System ... 108
7.5.1 Hardware ... 108
7.5.1.1 Black Box Diagram ... 108
7.5.1.2 Electronics ... 111
7.5.2 Software ... 115
7.5.3 Packaging ... 116
7.6 Prototype ... 118
7.6.1 Structure ... 118
7.6.2 Hardware ... 123
7.6.3 Software ... 126
7.6.4 Tests & Results ... 130
7.7 Summary ... 131
8. Conclusions ... 132
8.1 Achievements ... 132
8.2 Limitations ... 132

8.3 Personal Outcomes 133
8.4 Future Development 134
9. Acknowledgements 134
10. Bibliography 134

Maris Habitats

Figure 1: The logo of Maris Habitats

Divers Team:

- Hernán Nieto Marabini
- Chaehee Kim
- Ida Schmitt
- Isak Björk
- Louis Van Nederkassel
- Oda Kristine Johansen Fossvoll

2026/02/16 22:34 · epsatisep · 0 Comments

Abstract

Hosted by the Instituto Superior de Engenharia do Porto (ISEP), the European Project Semester (EPS) program facilitates an interdisciplinary environment for engineering students of diverse nationalities. The projects serve as a multidisciplinary platform for the joint acquisition and application of technical skills, specifically oriented toward the lifecycle of a proof-of-concept prototype, from initial design to rigorous testing.

The ongoing degradation of marine ecosystems due to climate change and anthropogenic pressures has severely reduced natural underwater habitats. Traditional artificial reefs offer structural restoration but typically lack active environmental monitoring capabilities. To address this limitation, this paper presents Maris Habitats, an innovative smart modular reef system developed within the European Project Semester (EPS) framework at ISEP in 2026.

The proposed solution integrates stackable Reef Blocks made of basalt fiber-reinforced concrete with a removable Smart Module. The Smart Module consists of a Smartlogger and a Smartlogger attachment. The Smartlogger contains the sensors, battery, Secure digital (SD) card, and electronic components needed for local environmental data logging. Throughout the development process, a robust theoretical framework was established, positioning the project at the forefront of ethical design and sustainability.

Significant technical challenges were encountered and mitigated, including managing multiple design iterations, navigating a steep learning curve through external expert consultations, and overcoming the inherent complexities of prototyping. Experimental testing of a downscaled prototype validated the core operational logic and structural integration. Future developments will focus on pilot tests and academic conferences to collect empirical data, establishing credibility before initiating institutional or

commercial agreements, with the long-term goal of global oceanic deployment.

2026/02/16 22:31 · epsatisep · 0 Comments

Glossary

Abbreviation	Description
BBNJ	Biodiversity Beyond National Jurisdiction
BFRP	Basalt Fiber-Reinforced Polymer
C2C	Consumer-to-Consumer
CAC	Customer Acquisition Cost
CAPEX	Capital Expenditure
CSV	Comma-Separated Values
CTD	Conductivity Temperature Depth
CPT	Camptothecin
DaaS	Data-as-a-Service
DVL	Doppler Velocity Log
EPS	European Project Semester
ESG	Environmental, Social, and Governance
EU	European Union
EVA	Ethylene-Vinyl Acetate
FOS	Factor of Safety
GEF	Global Environment Facility
GNSS	Global Navigation Satellite System
HSC	High Strength Concrete
I^2C	Inter-Integrated Circuit
IMU	Inertial Measuring Unit
IoT	Internet of Things
ISEP	Instituto Superior de Engenharia do Porto
IP68	Ingress Protection 68
KPI	Key Performance Indicator
MPA	Marine Protected Areas
NGOs	Non-governmental Organizations
NPT	National Pipe Tapered
NRL	Nature Restoration Law
OBC	On Board Computer
PDMS	Polydimethylsiloxane
PESTEL	Political, Economic, Social, Technological, Environmental, and Legal
PLA	Polylactic Acid
PMS	Power Management System
RTC	Real Time Clock
SAC	Sulfoaluminate Cement
SD	Secure Digital
SDG	Sustainable Development Goals

Abbreviation	Description
SLIPS	Slippery Liquid-Infused Porous Surfaces
SMART	Specific, Measurable, Achievable, Relevant and Time-bound
SWOT	Strengths, Weaknesses, Opportunities and Threats
TDS	Total Dissolved Solids
UN	United Nations
USB	Universal Serial Bus
WBS	Work Breakdown Structure
WWF	World Wide Fund for Nature

2026/02/16 22:32 · epsatisep · 0 Comments

1. Introduction

This chapter introduces the project's foundational elements, beginning with the team’s composition and motivation. It defines the core problem, the proposed solution, and the primary objectives. Finally, it outlines the technical requirements and the testing procedures used to verify their fulfillment.

1.1 Presentation

The 'Divers' team comprises six students from various nations with diverse academic backgrounds. Brought together at ISEP to participate in the EPS, the team objective is to leverage the collective skills to develop a sustainable solution for a real-world challenge. Figure 2 shows the group that represents Maris Habitats.

Figure 2: The 'Divers' team

Table 1: Divers team

Name	Country	Field of Study
Hernán Nieto Marabini	Spain	Biomedical Engineering
Chaehee Kim	South Korea	Industrial Engineering
Ida Schmitt	Germany	Interactive Media
Isak Björk	Finland	Electrical Engineering & Automation
Louis Van Nederkassel	Belgium	Product Development
Oda Kristine Johansen Fossvoll	Norway	Information Technology

1.2 Motivation

The motivation for this project is based on the growing concern about the degradation of marine ecosystems and the decline of natural reef habitats. Coral reefs and other complex seabed structures provide important habitats for many marine species, including fish, invertebrates, and algae. However, many of these ecosystems are currently under pressure due to factors such as climate change, pollution, overfishing, and habitat destruction.

Artificial reefs have been proposed as one possible approach to support marine biodiversity and help restore degraded habitats. By creating structures that mimic the complexity of natural reef environments, artificial reefs may provide shelter, feeding areas, and breeding grounds for marine organisms. Understanding how different materials and structural designs influence these habitats is therefore an important topic in marine environmental research.

1.3 Product

Maris Habitats is a modular reef infrastructure and environmental monitoring system designed for underwater environments. The product combines physical Reef Blocks with an optional removable Smart Module, allowing it to provide both habitat support and long-term environmental data collection.

The Reef Blocks are concrete habitat structures designed to be placed on the seabed. They include surfaces, cavities, and sheltered spaces that may support habitat formation over time. Instead of claiming immediate biological recovery, the product focuses on providing a physical structure that can be used in marine restoration, research, or environmental monitoring projects.

The Smart Module is the removable monitoring assembly of the system. It consists of the Smartlogger and the Smartlogger attachment. The Smartlogger is the rectangular box that contains the sensors, battery, SD card, and electronic components used for environmental monitoring. The Smartlogger attachment supports and holds the Smartlogger on the Reef Block.

The Smartlogger collects environmental data from selected locations around the reef structure. This data can help users understand local site conditions and observe how the reef and surrounding marine environment change over time. The monitoring system is designed to operate with low power consumption and store data locally, reducing the need for continuous communication infrastructure.

The final product is intended for organizations such as public institutions, coastal municipalities, research groups, environmental non-governmental organizations (NGOs), port authorities, aquaculture operators, and marine infrastructure companies. These customers may use Maris Habitats as part of restoration projects, long-term monitoring programs, sustainability reporting, or environmental decision-making.

1.4 Problem

The basis for this idea is the global environmental challenge of marine ecosystem degradation. The causes of this problem are multiple; global warming are raising ocean levels and ocean temperatures. This is altering the conditions of most of the underwater ecosystems, and this evolves in multiple species having to migrate from their original environments to new ones.

Another major issue is the impact of human fishing activities on marine ecosystems. Fishing is practiced worldwide and is regulated by governments and various institutions. However, in some areas, intensive fishing can disturb marine food chains and contribute to the decline of certain fish populations. These changes may also affect other species that depend on balanced marine ecosystems.

The third environmental concern is the decline of marine oxygen production and overall ecosystem balance. Changes in marine fauna can also affect marine flora, including algae and coral reef ecosystems. Coral reefs, such as the Great Barrier Reef, are under pressure from climate change, rising sea temperatures, and other environmental stressors. Their degradation can affect biodiversity, habitat quality, and the stability of marine ecosystems. Therefore, there is a growing need for solutions that support marine restoration and long-term ecosystem monitoring.

1.5 Objectives

This project focuses on developing a sustainable and technically feasible concept for a modular artificial reef system with environmental monitoring functions. The main goal is not to prove immediate biological recovery, but to design a reef structure and a basic sensing system that can support future marine restoration and monitoring projects.

The first objective is to design a modular reef structure that can be adapted to different sites and project sizes. The structure should be made of repeatable Reef Blocks that can be combined in several ways. These blocks should provide surfaces, cavities, and sheltered spaces that may support habitat formation over time.

Another important objective is to select materials that are suitable for marine conditions. For the final design, durable and environmentally compatible materials, such as basalt fiber-reinforced concrete, are considered because they can improve resistance to seawater conditions and reduce long-term environmental risks **[1]**, **[2]**.

The project also aims to include a removable Smart Module. Instead of placing electronics permanently inside the Reef Block, the system uses a Smartlogger placed in a Smartlogger attachment. The Smart Module consists of the Smartlogger and the Smartlogger attachment. This makes it easier to check, repair, or replace electronic components without removing the whole Reef Block from the seabed.

A further objective is to collect useful environmental data. In the final system, the intended parameters include temperature, pressure or depth, pH, and conductivity. This data can help users understand the conditions around the installation site and observe how the surrounding marine environment changes over time.

For the prototype, the objective is more limited. The prototype is intended to validate the basic sensing and data logging concept under controlled conditions. Due to budget and component availability, it uses a simplified sensor set, including temperature, pressure, and total dissolved solids (TDS). The pH and conductivity sensors are reserved for the final product.

Finally, the project aims to reduce unnecessary disturbance to the marine environment. The removable Smart Module allows maintenance, battery replacement, and data collection to be carried out without disturbing the main Reef Block. Since the Smartlogger can be removed from the Smartlogger attachment, failed or damaged electronic components can also be taken out instead of being left underwater.

1.6 Requirements

This section defines the main requirements of the Maris Habitats system. The requirements are divided into functional and non-functional categories. Functional requirements describe what the system should do, while non-functional requirements define the conditions needed for safe and reliable operation in a marine environment.

Because the project separates the final product from the prototype, the requirements are also considered at two levels. The final product is intended for long-term marine deployment, while the prototype is designed to validate the basic sensing and data logging concept under controlled

conditions.

1.6.1 Functional Requirements

The physical reef structure must include cavities, textured surfaces, and sheltered spaces that may support the attachment and growth of marine organisms over time **[3]**.

The structure must be modular, so that several Reef Blocks can be combined and adapted to different project sizes and site conditions.

The final system must collect environmental data at predefined time intervals. The intended final measurement parameters include water temperature, pressure/depth, pH, and conductivity.

The prototype uses a simplified sensor set due to budget and component availability. For prototype testing, the measured parameters include temperature, pressure, and TDS. The pH and conductivity sensors are reserved for the final product.

The collected data must be stored locally using a data storage unit such as a Secure Digital (SD) card. This allows long-term operation without relying on external communication infrastructure or real-time underwater data transmission.

Energy consumption must be minimized to extend the operational lifetime of the monitoring system. This is achieved through low-power operation, where the system remains active only during short measurement cycles.

The system must perform measurements periodically, typically once per hour. During each cycle, the system remains active only for the time required to stabilize sensor readings and store the data.

The Smartlogger must be removable from the Smartlogger attachment so that battery replacement, sensor inspection, maintenance, and data retrieval can be carried out without removing the whole Reef Block from the seabed.

1.6.2 Non-Functional Requirements

In addition to functional capabilities, the system must satisfy several non-functional requirements to ensure safe and reliable operation in marine environments. Since the structure is deployed underwater and interacts directly with marine ecosystems, material selection, structural stability, waterproofing, and maintenance access are critical.

To avoid environmental risks, the Reef Block structure must be made from durable, non-toxic, and environmentally compatible materials that do not release harmful substances into the marine environment. Poorly selected artificial reef materials can create long-term environmental problems, as shown by previous failed reef projects such as Osborne Reef **[4]**.

For the final product, basalt fiber-reinforced concrete is considered as the main structural material because basalt fibers are known for corrosion resistance and chemical stability in marine environments **[5]**.

The Reef Block must be designed to remain stable under expected currents and wave conditions without displacement. Artificial reef guidelines emphasize that reef materials should be stable and

remain at the intended deployment site **[6]**.

All electronic components, including sensors, batteries, and storage units, must be enclosed in a waterproof Smartlogger housing with at least IP68 protection to prevent water ingress and support underwater operation **[7]**.

The Smartlogger must be designed to reduce the risk of leakage, corrosion, and internal moisture. Moisture-absorbing materials may be used inside the enclosure to help control condensation.

The Smartlogger design must allow access for maintenance, battery replacement, and data retrieval. This is especially important because the system stores data locally and requires scheduled retrieval.

The prototype does not need to meet the same marine-grade requirements as the final product. It is intended for controlled testing and should be clearly presented as a simplified validation model rather than a final deployable system.

1.7 Tests

The main objective of testing the prototype is to verify that the Maris Habitats concept functions as intended under controlled conditions. Since the prototype is a simplified validation model, the testing phase focuses on three main aspects: the basic operation of the sensor system, the structural stability of the Reef Block, and the protection of the electronic components. The final product is intended for long-term marine deployment, whereas the prototype is primarily used to validate the measurement and data-logging concept in a controlled environment. For this reason, the prototype tests will focus on temperature, pressure, and Total Dissolved Solids (TDS) measurements, while more advanced parameters such as pH and conductivity are reserved for the final product.

A structural test will be carried out using SOLIDWORKS simulation tools. This test will be used to analyze how the Reef Block structure responds to applied forces and to evaluate whether the design can withstand expected mechanical loads. The simulation will help identify possible weak points in the structure and support further design improvements before physical production or deployment.

A prototype test will be performed in air to verify the basic functionality of the Smartlogger electronic system. This test will confirm whether the sensors, microcontroller, power supply, and data storage system operate correctly before any water-related testing is considered. The purpose of this stage is to reduce technical risk by ensuring that the system can collect and store sensor data under safe and controlled conditions.

These tests will provide an initial validation of the prototype and help determine whether the system is ready for further development and more realistic environmental testing.

1.8 Report Structure

Chapter	Description
1. Introduction	Introduction to the project and the report
2. Background and related work	Previous similar projects with common useful knowledge
3. Project management	Distribution and important aspects about the project itself
4. Marketing plan	Analysis of the market and economic feasibility

Chapter	Description
5. Eco-efficiency Measures for Sustainability	Sustainable responsibilities in different aspects
6. Ethical and Deontological Concerns	Different ethical points of view for the project
7. Project development	Evolution from the design to the prototype
8. Conclusions	Final ideas of the outcomes achieved and next steps
9. Bibliography	Information sources

2026/02/16 21:05 · epsatisep · 0 Comments

2. Background and Related Work

This chapter reviews and compares several companies with relevant prior projects. The analysis focuses not only on their core concepts and features but also on the materials, sensor mechanics, and distinguishing factors such as biological and geographical analysis.

2.1 Introduction

This chapter establishes the technical and scientific foundation for the Maris Habitats project by situating it within the broader context of artificial reef design and underwater environmental monitoring. Traditional artificial reefs are usually passive structures that provide physical habitat support, while marine monitoring systems are often treated as separate technical equipment.

Maris Habitats aims to connect these two areas by combining modular reef infrastructure with a removable Smart Module. Instead of focusing on real-time data transmission, the system is designed for long-term local data logging. This approach reduces technical complexity and makes the concept more realistic for a low-power underwater system.

The chapter reviews artificial reef concepts, existing companies, material options, sensor placement challenges, and biological and geographical factors. This background helps justify the project direction: a modular Reef Block system supported by environmental data collection rather than a fully live underwater Internet of Things (IoT) platform.

2.2 Concepts

Artificial marine habitats can be designed in several ways to help restore marine ecosystems and support endangered fish species. One approach is the use of 3D-printed reef structures, which can be made from materials such as ceramic, limestone, or eco-concrete.

These materials are durable and suitable for marine environments. Examples of projects using this approach include Reef Design Lab in Australia, which develops 3D-printed reef structures for marine habitat restoration, and SECORE coral restoration projects, which focus on rebuilding damaged coral reefs by supporting coral growth and reef recovery **[8]**, **[9]**.

Figure 3 shows an example of a 3D-printed artificial reef structure. This type of design is relevant to

Maris Habitats because it shows how repeated artificial structures can create habitat complexity underwater.

Figure 3: Example of a 3D-printed artificial reef structure used for marine habitat restoration **[10]**

Another commonly used solution is reef balls. These are concrete dome structures with holes that mimic natural reef caves. Because of their simple design, they are easy to mass-produce and very stable when placed on the seabed.

The holes and cavities provide immediate shelter for fish and other marine animals, allowing the structures to quickly function as protective habitats **[11]**, **[12]**.

Figure 4 presents an example of a reef ball structure. The holes in the concrete dome show how a simple shape can still provide sheltered spaces for marine life.

Figure 4: Example of reef ball structures used as artificial reef habitats **[13]**

A different method is the creation of Bio-Rock or electric reefs. These reefs consist of metal structures through which a small electrical current is passed. This current causes minerals from seawater to deposit onto the structure, gradually forming a limestone-like coating. Previous research showed that corals under biorock treatment had higher growth than the control group, with an observed growth ratio of 4:1 in the studied case. This technique is known as Bio-Rock technology **[14]**.

Figure 5 shows an example of a Biorock reef structure that has been colonized by coral after installation.

Figure 5: Example of a Biorock reef structure colonized by coral in Indonesia. Image by U.S. Fish and Wildlife Service Headquarters, licensed under CC BY 2.0 **[15]**

Artificial habitats can also be designed as modular “fish cities”. These structures include holes of different sizes so that multiple fish species can use them for shelter. Vertical elements are often incorporated to mimic natural reef cliffs, and the modules can be interconnected to create more complex ecosystems that support a greater diversity of marine life **[16]**.

Figure 6 shows rrreefs’ modular clay reef structure. This example is relevant to Maris Habitats because it shows how repeated modular units can be arranged to create complex underwater habitats.

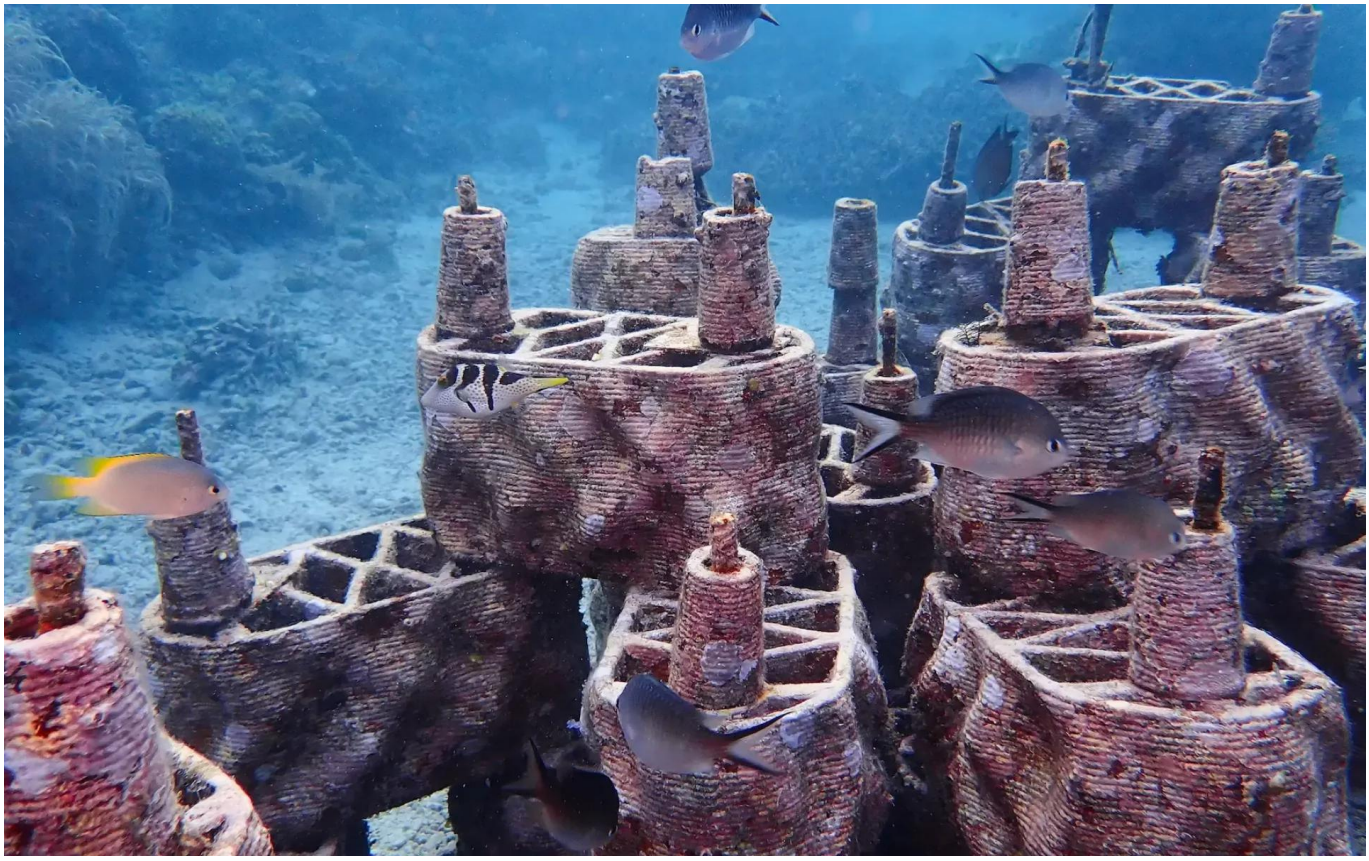

Figure 6: rrreefs modular clay reef structure used for coral reef regeneration **[17]**

Another concept is the development of living seawalls. These are harbor walls or seawalls designed with textured panels and cavities so that marine organisms can attach to them and live on them. Instead of smooth concrete surfaces that support little life, these modified structures create habitats for algae, small invertebrates, and fish **[18]**.

Figure 7shows different living seawall panel designs. The image is useful because it shows how surface texture, cavities, rock pools, and swim-through spaces can be added to hard coastal structures to support marine life.

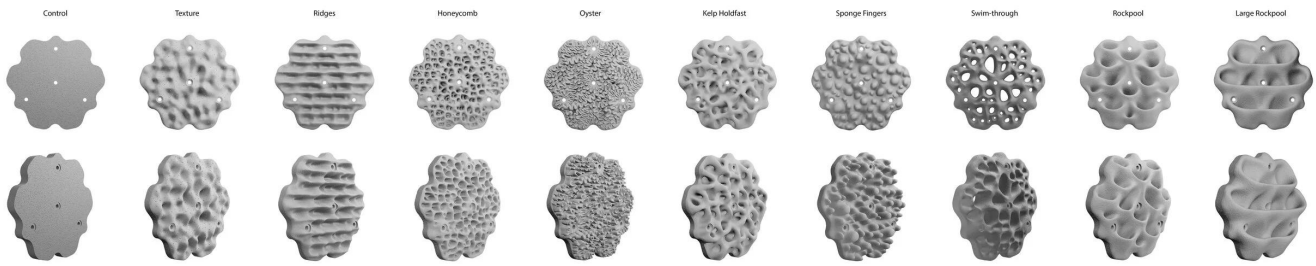

Figure 7: Examples of living seawall panel designs with different textures, cavities, rockpools, and swim-through spaces **[19]**

Several endangered fish species can benefit from these types of artificial habitats, including the Humphead wrasse, Nassau grouper, Atlantic Goliath Grouper, Smalltooth Sawfish, and the European eel. Although many of these species grow quite large, the habitats are especially important for juvenile fish. Young fish can use the structures as shelter and breeding areas, increasing their chances of survival. When more juvenile fish survive, adult populations can recover and thrive. Larger predators may also benefit by hunting around these habitats.

In habitat design, the shape of the structure is often more important than the material used. It is important to include many holes and cavities in different sizes so that different fish species can find suitable shelter. Vertical structures are also important because they mimic natural reef cliffs. In addition, rough surface textures help corals and algae attach and grow on the structures. Finally, ensuring good water flow around the habitat is essential, as it brings nutrients and oxygen that support marine life.

2.3 Companies

This section reviews selected companies related to artificial reef systems and marine habitat infrastructure. The aim is to understand how existing companies approach reef structure, material choice, modularity, and ecological design.

The review also considers whether these solutions include monitoring or environmental data collection as a core feature. This helps identify the position of Maris Habitats as a modular reef infrastructure system with a removable Smart Module and long-term local data logging.

ECOncrete

ECOncrete is a company that develops bio-enhancing concrete technologies for coastal, marine, and offshore infrastructure. Its solutions are designed to improve the ecological performance of concrete structures while still maintaining their engineering function. The company's approach is applied in infrastructure such as ports, seawalls, coastal protection systems, offshore assets, and subsea cable protection.

The main idea of ECOncrete is to make marine infrastructure less biologically poor than conventional smooth concrete structures. This is achieved through changes in concrete composition, surface texture, and structural design. According to the Living Ports project, ECOncrete's rough and irregular surfaces, gaps, and swim-through holes can create habitats, shelter, and breeding spaces for marine organisms **[20]**.

One example of ECOncrete's application is the Living Ports Project at the Port of Vigo. In this project, ECOncrete Coastalocks and ecologically enhanced seawalls were used to create nature-inclusive port infrastructure. As shown in Figure 8, marine growth can develop on these concrete elements over time, showing how infrastructure can maintain its coastal protection function while also supporting ecological value.

However, ECOncrete is different from Maris Habitats in its main focus. Based on the available product descriptions, ECOncrete mainly provides bio-enhancing concrete infrastructure rather than a modular reef system with a removable Smart Module. There is also no clear indication that long-term local data logging is included as a core product feature. Therefore, ECOncrete is a useful benchmark for ecological concrete design, while Maris Habitats aims to add environmental data collection through a removable Smart Module.

Figure 8: ECOncrete bio-enhancing coastal protection units used in the Living Ports Project at the Port of Vigo **[21]**

Reef Design Lab

Reef Design Lab is an Australian design and fabrication company that develops artificial reef and marine habitat solutions. The company describes its work as the design, prototyping, and manufacturing of coastal solutions, with a focus on improving ecological performance in artificial reefs and coastal habitat infrastructure **[22]**.

One of its well-known systems is MARS, which stands for Modular Artificial Reef Structure. MARS is a ceramic 3D-printed modular system designed to construct reef habitat without the need for heavy-duty equipment. The system can be deployed from small boats and assembled by divers, making it suitable for reef restoration projects in locations where large marine construction equipment may be difficult to use **[23]**.

Figure 9 shows Reef Design Lab's MARS system. The image helps illustrate how a modular reef structure can create habitat complexity while still being based on repeated units.

Reef Design Lab is relevant to Maris Habitats because both projects use modular reef structures and focus on creating physical habitat infrastructure in underwater environments. The use of repeated modular units also makes Reef Design Lab a useful benchmark for comparing scalability, deployment, and structural complexity.

However, Reef Design Lab differs from Maris Habitats in its main focus. Based on the available product descriptions, Reef Design Lab mainly focuses on reef design, 3D-printed structures, and project-based marine habitat solutions. There is no clear indication that a removable Smart Module or long-term local environmental data logging is included as a core product feature. Therefore, Reef Design Lab is useful as a benchmark for modular reef design, while Maris Habitats aims to combine

Reef Blocks with a removable Smart Module for long-term environmental observation.

Figure 9: Reef Design Lab's MARS system, a ceramic 3D-printed modular artificial reef structure **[24]**

IntelliReefs

IntelliReefs is a reef restoration initiative and technology platform connected to Reef Life Foundation. It focuses on engineered artificial reef structures made from Oceanite, a bio-enhancing marine substrate designed to mimic natural ocean mineral compounds. According to IntelliReefs, Oceanite can be customized according to site, species, and function, and is used to create reef modules that support coral, seaweed, kelp, and other marine organisms **[25]**.

The main idea of IntelliReefs is to combine material science with reef design. Its Oceanite material is described as a complex mineral matrix held together by a proprietary nanobinder, developed to support diverse species growth and integration into local ecosystems **[26]**. The structures are designed with textured and porous surfaces, as well as small spaces where marine organisms can attach, be protected, and grow over time.

As shown in Figure 10, IntelliReefs uses modular reef units that can be arranged to create complex underwater habitats. These structures are relevant to Maris Habitats because both concepts use modular reef elements and aim to create underwater infrastructure that can interact with the surrounding marine environment.

However, IntelliReefs differs from Maris Habitats in its main focus. Based on the available information, IntelliReefs mainly focuses on Oceanite-based artificial reef structures and marine restoration solutions. There is no clear indication that a removable Smart Module or long-term local environmental data logging is included as a core product feature. Therefore, IntelliReefs is a useful benchmark for alternative reef materials and ecological reef design, while Maris Habitats aims to combine Reef Blocks with a removable Smart Module for long-term environmental observation.

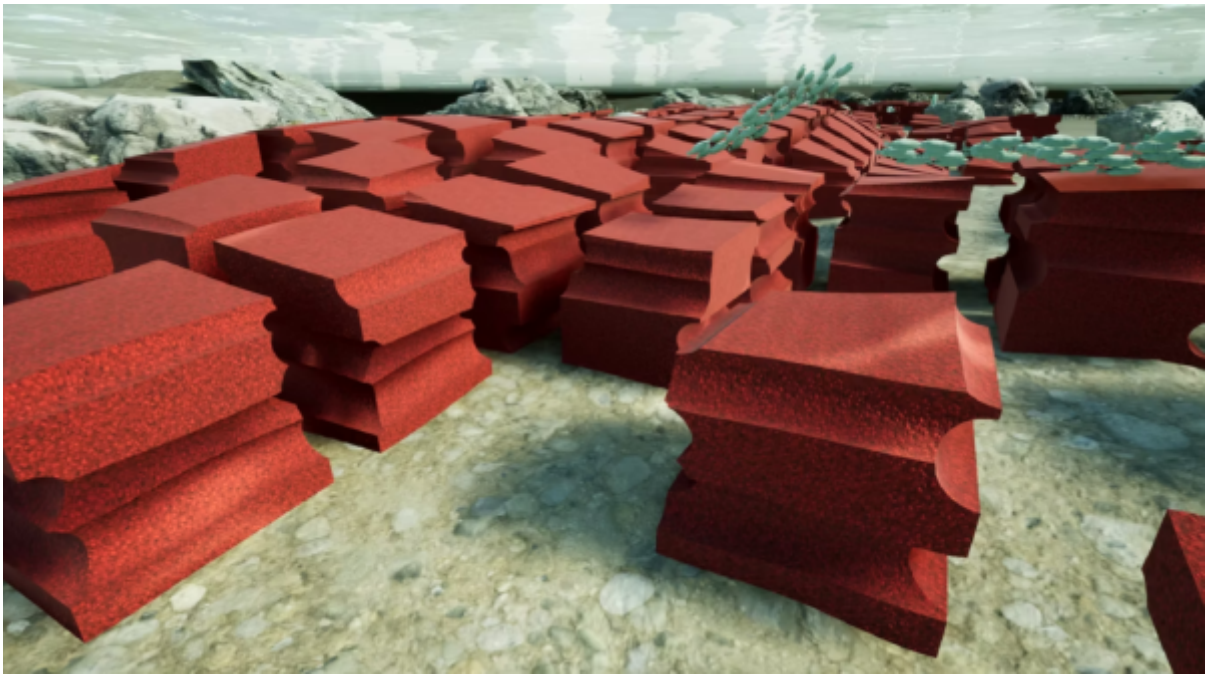

Figure 10: IntelliReefs modular artificial reef structures made with Oceanite material **[27]**

rrreefs

rrreefs is a Swiss start-up that focuses on rebuilding and regenerating degraded coral reefs. The company develops a 3D-printed modular reef system made from clay, designed to support coral growth and provide habitat for marine life **[28]**.

The rrreefs system is based on interlocking clay modules that can be arranged in different shapes depending on the local reef conditions and restoration needs. These modules are designed to mimic natural reef structures, create habitat diversity, and provide sheltered spaces for coral larvae, juvenile fish, crustaceans, and other marine organisms. As shown in Figure 11, the modular units can form complex underwater structures.

rrreefs is relevant to Maris Habitats because both concepts use modular reef structures and aim to create underwater infrastructure that can interact with the surrounding marine environment. The company is also relevant as a business benchmark because it operates as an impact-driven reef restoration start-up and works with local partners to implement reef projects in different countries.

However, rrreefs differs from Maris Habitats in its main focus. rrreefs mainly focuses on coral reef regeneration through 3D-printed clay reef modules and local restoration partnerships. Based on the available product descriptions, there is no clear indication that a removable Smart Module or long-term local environmental data logging is included as a core product feature. Therefore, rrreefs is a useful benchmark for modular reef design and reef restoration business models, while Maris Habitats aims to combine Reef Blocks with a removable Smart Module for long-term environmental observation.

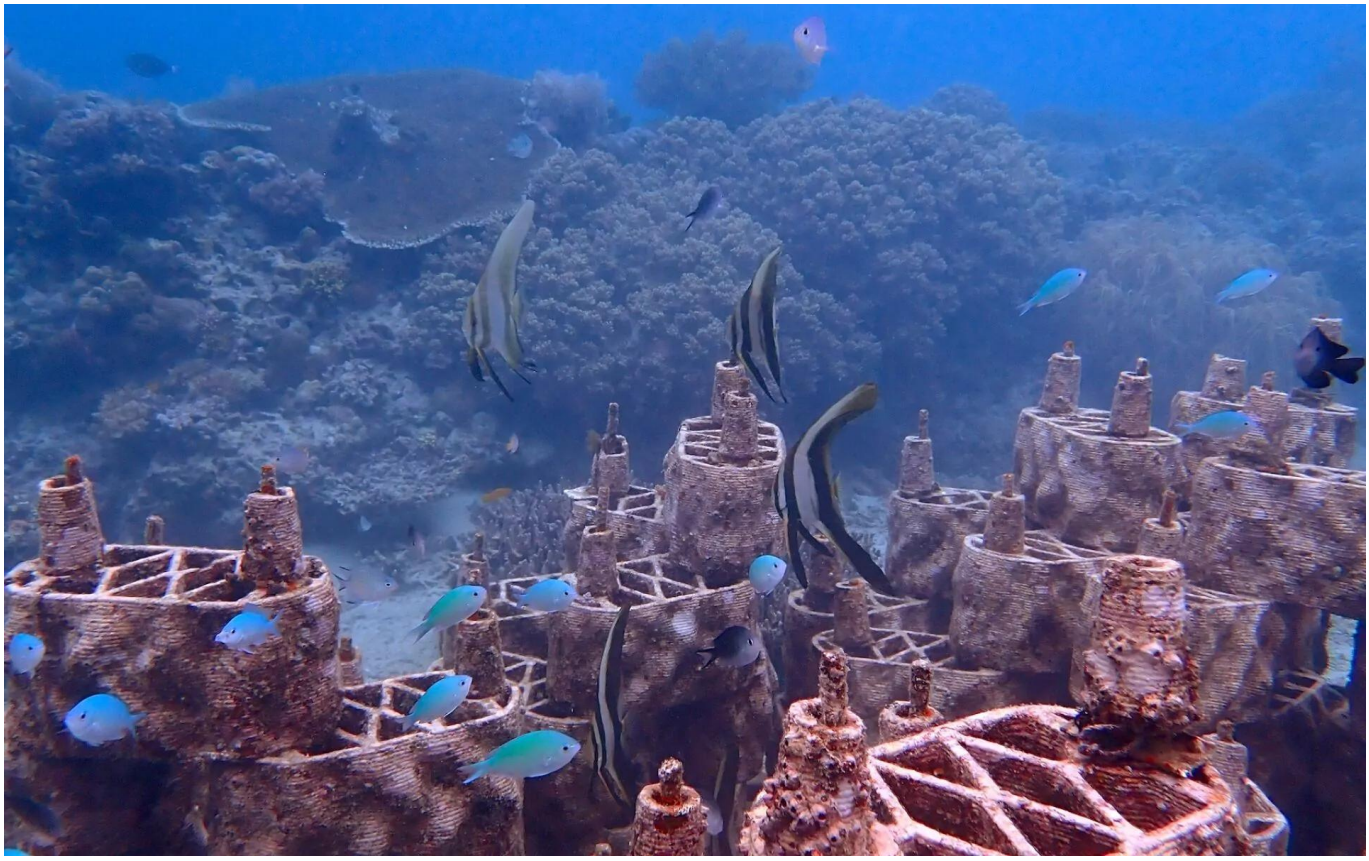

Figure 11: Underwater view of rrreefs modular clay reef structures used for coral reef regeneration **[29]**

2.4 Comparative Analysis

The selected companies and solutions are evaluated based on criteria such as reef structure, modularity, material approach, monitoring capability, data collection method, maintenance, and suitability for long-term environmental observation.

Since Maris Habitats is designed to observe how an artificial reef and the surrounding marine conditions change over time, the comparison looks beyond ecological enhancement. It also considers whether each solution can collect, store, and retrieve environmental data for later analysis.

Table 2: Comparative overview of selected artificial reef and marine infrastructure companies and the proposed Maris Habitats system

Criteria	**ECOncrete**	**Reef Design Lab**	**IntelliReefs**	**rrreefs**	**Maris Habitats**
Main business focus	Bio-enhancing concrete for marine and coastal infrastructure	Designed and 3D-printed reef structures	Oceanite-based artificial reef restoration	3D-printed modular clay reef restoration	Modular reef infrastructure and environmental data
Product type	Eco-engineered concrete infrastructure units	Modular reef modules and design services	Artificial reef modules made with Oceanite marine substrate	Interlocking 3D-printed clay reef modules	Reef Blocks with an optional removable Smart Module

Criteria	ECOncrete	Reef Design Lab	IntelliReefs	rrreefs	Maris Habitats
Main application	Ports, seawalls, shoreline protection, offshore assets, and subsea cable protection	Reef restoration and marine habitat construction	Coral reef restoration and marine habitat support	Coral reef regeneration and habitat creation	Reef installation, environmental monitoring, and long-term site observation
Modularity	Moderate	High	High	High	High
Ecological design focus	High	High	High	High	Moderate to high
Material / design approach	Bio-enhancing concrete composition, surface texture, and macro-design	Ceramic 3D-printed modular reef structures	Oceanite bio-enhancing marine substrate	3D-printed clay modules inspired by natural reef structures	Basalt fiber-reinforced Reef Blocks and a removable Smart Module
Integrated sensors	No clear indication as a core product feature	No clear indication	No clear indication	No clear indication	Yes, inside the Smartlogger
Real-time data transmission	No clear indication	Not specified	Not specified	Not specified	No
Long-term local data logging	No clear indication as a core product feature	Not specified	Not specified	Not specified	Yes
Data retrieval method	Not specified	Not specified	Not specified	Not specified	SD card / scheduled annual Smartlogger retrieval
Service model	Project-based marine infrastructure solution	Design and project-based reef solution	Restoration project-based solution	Impact-driven reef restoration projects with local partners	Reef Blocks with optional Smart Modules and data service
Main differentiation	Ecological concrete material and infrastructure integration	Complex modular reef design	Alternative Oceanite-based reef material	3D-printed clay reef modules and local restoration partnerships	Removable Smart Module and long-term environmental data

The comparison presented in Table 2 is based on publicly available information from company websites, project descriptions, and related documentation. The selected companies represent different approaches to artificial reef and marine infrastructure development. ECOncrete focuses on bio-enhancing concrete for marine and coastal infrastructure **[30]**. Reef Design Lab focuses on designed and 3D-printed reef structures for artificial reefs and coastal habitat infrastructure **[31]**. IntelliReefs uses Oceanite-based artificial reef structures for reef restoration and marine habitat support **[32]**. rrreefs develops interlocking 3D-printed clay modules for coral reef regeneration **[33]**.

Compared with these companies, Maris Habitats is positioned as a modular reef infrastructure and environmental data solution. The project does not focus only on ecological design or reef structure, but also on collecting environmental data around the reef over time.

The main difference is the removable Smart Module, which includes the Smartlogger and the Smartlogger attachment. The Smartlogger stores data locally and allows scheduled retrieval during maintenance.

2.5 Materials

For this project involving a marine habitat at a maximum depth of 50 m off the Portuguese coast, the materials must withstand a hydrostatic pressure of approximately 5 bar while supporting biological growth and protecting the Smartlogger and its internal monitoring components. To ensure a high level of efficiency and environmental compatibility, various materials used in international restoration efforts have been analyzed.

The selection of materials and the structural design of artificial habitats are fundamental to ensuring both environmental compatibility and long-term viability. For this project, concrete has been identified as the primary material due to its durability and proven use in underwater construction. Its capacity to provide structural integrity against significant environmental stressors, such as salinity, strong currents, and wave action, makes it a common material for creating resilient marine foundations. While the chemical properties of concrete, particularly its initial pH levels, have historically been a point of debate, recent research has shifted the focus toward a more nuanced understanding of its behavior in open marine environments **[34]**.

Studies indicate that the high alkalinity of newly submerged concrete, typically between 12–14, is rapidly diluted by seawater, resulting in no significant long-term detriment to coral growth or benthic colonization **[35]**. This suggests that ecological success depends less on extended curing periods or pH-neutral mixtures and more on the physical attributes of the habitat. Consequently, the following sections will detail how this project prioritizes structural complexity, substrate durability, and hydrodynamic stability **[36]**. By optimizing the weight-to-complexity ratio and ensuring low water absorption, the design can help ensure that these structures remain stationary during extreme weather events while providing the necessary niches for biodiversity to thrive **[37]**.

Based on the research and articles reviewed, the following subsection evaluates different material options, ranging from traditional foundations to innovative biocompatible substrates, in order to select the most suitable materials for this specific implementation.

2.5.1. Structural Materials

A. Bacterial (Self-healing) High-Strength Concrete (HSC)

This material incorporates bacterial spores, specifically *Bacillus sphaericus* (strain ATCC 14577), which remain dormant until a crack occurs. Water ingress activates the bacteria, which then precipitate calcium carbonate to seal the crack **[38]**.

- Pros: Achieves **96 % recovery in water tightness** within 56 days of seawater immersion **[39]**. It maintains structural integrity above **100 MPa**, which is well above the hydrostatic pressure expected at 50 m. It significantly reduces rebar corrosion by sealing entry points for chloride ions **[40]**.
- Cons: Higher complexity in mixing and requires specific nutrients like calcium lactate and urea **[41]**.
- Price: Estimated at **180 €/m^3 – 260 €/m^3**.

B. Basalt Fiber-Reinforced Polymer (BFRP)

Basalt fibers, derived from natural volcanic rock, are used to reinforce concrete or as standalone composite laminates **[42]**.

- Pros: **Naturally non-corrosive** and chemically stable in aggressive saline environments **[43]**. Vacuum infusion manufacturing can produce laminates with flexural strength up to **400 MPa** **[44]**. It provides a more resilient, damage-tolerant failure mode compared to the brittle collapse of traditional reinforced concrete **[45]**.
- Cons: Slightly lower peak flexural strength compared to glass fibers, although superior in long-term durability and environmental footprint **[46]**.
- Price: Estimated at **160 €/m^3 – 220 €/m^3**.

C. Geopolymer Gel Concrete

A cement-free binder using materials like fly ash and metakaolin modified with nano-silica (SiO_2) **[47]**.

- Pros: Significantly **lower CO_2 footprint** than Portland cement **[48]**. It shows superior resistance to chloride and sulfate attack in “wet-thermal” marine environments **[49]**.
- Cons: Higher production costs currently limit wide adoption **[50]**.
- Price: Estimated at **150 €/m^3 – 200 €/m^3**.

D. ECOncrete® / Sulfoaluminate Cement (SAC)

A proprietary concrete mix designed to reduce surface alkalinity to a neutral pH **[51]**.

- Pros: Surface **pH of 9–10** (closer to seawater pH of around 8) promotes the settlement of “ecosystem engineers” like oysters, serpulid worms, and coralline algae. These organisms provide **bioprotection**, adding a calcified layer that strengthens the structure and limits oxygen/chloride penetration **[52]**.
- Cons: Requires specialized design to ensure the lower pH does not compromise the protection of internal steel if used.
- Price: Estimated at **140 €/m^3 – 180 €/m^3**.

E. Recycled Glass (Partial Aggregate Replacement)

Crushed waste glass used to replace up to 30 % of fine aggregates in the concrete mix **[53]**.

- Pros: Improves **chemical resistance** and reduces water absorption **[54]**. It offers an eco-friendly way to utilize waste while maintaining sufficient compressive strength for marine applications **[55]**.
- Cons: Replacing more than 30 % of aggregate leads to a **significant reduction in compressive strength** **[56]**.
- Price: Estimated at **90 €/m^3 – 140 €/m^3**.

F. Biorock (Mineral Accretion)

Uses low-voltage DC electricity to precipitate minerals (limestone) directly from seawater onto an iron frame.

- Pros: Accelerates biological growth by **400 %** and allows the structure to **self-repair** after impacts **[57]**.
- Cons: Requires **constant power** from a buoy; if the power is interrupted, the iron frame

corrodes rapidly.
- Price: Base infrastructure **120 €/m³ – 160 €/m³** (excluding electrical components).

2.5.1.1 Comparative Table

The materials evaluated in the previous subsection are summarized in Table 3.

Table 3: Comparative table for materials evaluated

Material	**Primary Requirement Met**	**Pros**	**Cons**	**Estimated Price / m³**
Bacterial HSC	Longevity / pressure resistance	Autonomous repair; 96 % watertight	High complexity	180–260 €
Basalt Reinforcement	Corrosion resistance	Non-corrosive; volcanic origin	Lower flexural peak	160–220 €
Geopolymer Gel Concrete	Low carbon and chemical resistance	Lower CO_2; chloride and sulfate resistance	Higher production cost	150–200 €
ECOncrete®	Marine-life friendly	Neutral pH; bioprotection	Specific mix needs	140–180 €
Recycled Glass	Sustainability	Increased chemical resistance	Strength loss above 30 %	90–140 €
Biorock	Life promotion	4:1 growth; self-repairing	Power dependent	120–160 €

2.5.1.2 Materials for Prototype vs. Final

The final Maris Habitats product and the prototype have different material requirements because they have different purposes. The final product is intended for long-term underwater deployment, while the prototype is mainly used to validate the Reef Block shape, assembly process, Smartlogger attachment, and basic structural concept under controlled conditions.

For the final product, basalt fiber-reinforced concrete was selected as the intended material for the Reef Blocks. This material was chosen because the final Reef Blocks must remain stable on the seabed and resist long-term marine exposure, including saltwater, currents, wave action, and material degradation. Basalt fiber-based materials are suitable for marine applications because they offer mechanical performance and resistance to chemical and environmental degradation **[58]**. Concrete structures in marine environments must also be designed carefully because seawater exposure, chloride and sulfate attack, corrosion processes, and wave action can cause deterioration over time **[59]**.

For the prototype, the material selection was based on practicality, cost, availability, and ease of production. The prototype does not need to prove full marine durability because it is not intended for real underwater deployment. Instead, it should help the team check whether the Reef Block shape, Smartlogger position, Smartlogger attachment, assembly logic, and general handling are suitable.

During the prototype planning stage, three material options were considered:

Option 1: Polymer clay model

Polymer clay was considered during the early design stage because it can be shaped by hand and hardened in an oven. This makes it useful for quick form exploration when the team needs to test

different shapes before deciding on the final Reef Block geometry. Polymer clay remains soft until it is baked, and baking is used to cure the material so that the shape becomes hard **[60]**. It can also be stretched, cut, rolled, molded, stacked, and sculpted before baking, which makes it practical for small visual models and early design tests **[61]**.

However, polymer clay was not selected as the main prototype material because it is very different from the final concrete-based product. It cannot represent the real weight, concrete surface texture, porosity, or handling of the final Reef Block. It is also limited by oven size and is not suitable for validating structural performance, Smartlogger attachment, seabed stability, or long-term marine durability.

- **Pros:** Easy to shape, easy to modify before baking, low cost, and useful for early form exploration.
- **Cons:** Very different from the final concrete-based material, limited by oven size, does not represent real Reef Block weight, texture, porosity, or handling, and is not suitable for technical validation.

Option 2: Cement-based prototype cast with a 3D-printed mold

A cement-based prototype is closer to the final concrete-based product because it can better represent the general appearance, surface texture, weight, and handling of the Reef Block. Concrete is widely used for artificial reef construction and can be used to create complex shapes for marine habitat structures **[62]**. In this approach, PLA filament is used to produce a 3D-printed mold, and cement is poured into the mold and left to cure. Therefore, PLA is not used as the final material of the Reef Block prototype, but as a tooling material for shaping the cement-based model. PLA is suitable for this purpose because it is commonly used for rapid prototyping and can also be used for mold inserts or casting-related applications **[63]**, **[64]**.

This option allows the team to combine the geometric accuracy of 3D printing with the more realistic material behavior of a cement-based prototype. It is also low-cost and possible to produce locally. However, the prototype is not intended for real underwater deployment, and normal cement does not fully represent the final basalt fiber-reinforced concrete. Therefore, this option can be used to check the general shape, handling, assembly, and Smartlogger attachment, but it cannot prove long-term durability or full structural performance in marine conditions. For the final product, basalt fiber-reinforced concrete would still be required because it is more suitable for long-term marine exposure and resistance to chemical and environmental degradation **[65]**, **[66]**.

- **Pros:** Similar appearance to the final material, more realistic weight and texture, accurate geometry from the 3D-printed mold, low cost, and suitable for checking general shape, handling, assembly, and Smartlogger attachment.
- **Cons:** Does not fully represent basalt fiber-reinforced concrete, harder to modify after casting, requires curing time, and is not suitable for proving long-term marine durability because the prototype is only intended for controlled testing.

Option 3: Fully 3D-printed scale model or 3D-printed details

A fully 3D-printed model can represent the geometry of the Reef Block, Smartlogger, and Smartlogger attachment accurately. 3D printing is useful for rapid prototyping because it allows detailed shapes to be produced and modified more easily during the design process **[67]**. For this reason, this option can be useful for checking the modular shape, assembly process, Smartlogger attachment, and packaging concept before producing a cement-based prototype.

However, this option means that the Reef Block itself is made from 3D-printed plastic rather than cement or concrete. Because of this, the material properties are different from the final concrete-based product. A fully 3D-printed plastic model cannot represent the real weight, concrete surface texture, porosity, or marine durability of the final Reef Block. Therefore, it is useful for geometry and assembly validation, but not for checking realistic handling, seabed stability, or material behavior.

In the selected prototype approach, 3D printing is used mainly to produce the PLA mold for cement casting, rather than to make the final Reef Block prototype itself. Additional 3D-printed parts may still be used for small details or Smartlogger attachment features that require accurate geometry.

- **Pros:** Accurate geometry, easy to modify, fast to produce, suitable for assembly checks, Smartlogger attachment tests, packaging checks, and presentation.
- **Cons:** Different from the final material, does not represent real Reef Block weight, concrete surface texture, porosity, or marine durability, and is not suitable for material durability or seabed stability testing.

2.5.2 Sensor Placements

Designing a successful marine habitat involves a delicate technical paradox. On one hand, the project's primary objective is to encourage biological colonization and the growth of marine life; on the other, the integrated sensors require direct, unobstructed contact with seawater to maintain accuracy. This necessity creates a significant challenge, as the very "bio-friendly" environment the team aims to foster can lead to marine biofouling on sensitive equipment, which critically compromises data reliability and sensor sensitivity **[68]**.

To resolve this conflict, the strategy focuses on three integrated design pillars. First, a careful selection of housing materials must be made to support structural durability while protecting the internal components. Second, specialized antifouling coatings should be evaluated to prevent accumulation on sensor windows without leaching harmful chemicals into the surrounding habitat. Finally, the spatial distribution of the sensors must be strategically planned to allow for clear measurements while minimizing their exposure to rapid biological growth. This balanced approach ensures that the ecological goals do not come at the expense of long-term monitoring precision.

When positioning sensors, it is important to consider factors that may influence measurement accuracy, such as turbulence and disturbed flow conditions. Careful placement can significantly improve the reliability and consistency of the collected data.

The Smartlogger, which contains the sensors, is mounted at the top of the Smartlogger attachment to reduce the risk of interaction with seabed sediment. However, the sensors themselves should not be placed at the very top surface, as this location is more prone to biofouling, sediment accumulation, and coverage by marine organisms, which can degrade sensor performance over time.

Instead, the sensors are preferably mounted on a side surface where there is sufficient and consistent water flow. Positioning them slightly above the seabed further reduces the risk of sand and sediment deposition, ensuring more stable and accurate measurements. This placement also allows the surrounding water to circulate more freely around the sensors, which is particularly important for measurements such as conductivity, where undisturbed water flow is essential for obtaining reliable data.

In addition, the Smartlogger is positioned to be as accessible as possible to facilitate maintenance operations, such as sensor cleaning, battery replacement, and data retrieval.

2.5.2.1 Materials for Housing

The Smartlogger housing material must protect the internal electronics from high pressure and corrosion while maintaining long-term durability in seawater environments.

Titanium alloy (TC4) or **316 L stainless steel** are recommended for pressure resistance and durability **[69]**. For deeper or long-term deployments, titanium can be considered because it is described as a corrosion-resistant housing material suitable for long-term deployment in harsh environments, with a depth rating up to 6000 m **[70]**.

2.5.2.2 Antifouling Coatings

Even with durable housing materials, marine organisms may attach to exposed surfaces over time. For this reason, antifouling coatings are considered to reduce biological growth on sensors and maintain measurement accuracy.

- **Polydimethylsiloxane (PDMS):** A non-toxic, “fouling-release” coating that reduces the adhesion of algae and barnacles **[71]**.
- **Camptothecin (CPT)-based Paint:** A natural compound that has shown virtually no macrofouling after nine months of immersion **[72]**.
- **Slippery Liquid-Infused Porous Surfaces (SLIPS):** These provide exceptional resistance to organism attachment even in stagnant water **[73]**.

2.5.3 Biologic and Geographical analysis

Fish structure

Fish populations are generally associated with habitats that exhibit high structural complexity and spatial heterogeneity **[74]**. Research suggests that complex environments provide essential ecological resources necessary for survival, including food availability, shelter from predators, and suitable areas for reproduction. Structural features such as crevices, cavities, and irregular surfaces may create microhabitats that support a greater diversity of marine organisms and increase the overall ecological value of reef systems.

Artificial and natural reefs typically contain irregularities and indentations that form small shelters or “nooks”, which can serve as refuge areas for fish and other marine organisms. These structural features are believed to reduce predation risk and provide protected spaces where fish can rest or reproduce.

Studies also indicate that fish communities tend to perform better in connected habitat mosaics rather than isolated structures **[75]**. Networks of habitats may facilitate movement, feeding opportunities, and ecological interactions between species, which can contribute to more stable and diverse marine ecosystems.

Location

The location of artificial reefs plays a key role in determining their effectiveness. The chosen site should encourage marine life to settle while avoiding interference with human activities such as shipping routes or commercial fishing areas. Water depth is another important consideration. Reefs

placed too deep may not receive enough sunlight to support the growth of marine plants like algae, whereas reefs that are too shallow can be more vulnerable to damage from storms or human activity **[76]**.
Most of the artificial reef projects are placed at depths of 10-20 meters, but it all depends on which species and what type of marine life the reefs intended for.

2.6 Summary

Chapter 2 gives an overview of existing artificial reef concepts, relevant companies, material choices, sensor challenges, and biological and geographical factors. It shows that Maris Habitats differs from many existing solutions by combining modular Reef Blocks with a removable Smart Module for long-term local data logging. The chapter also highlights that successful reef design depends on durable marine materials, structural complexity, suitable sensor placement, and careful site selection.

2026/02/16 21:06 · epsatisep · 0 Comments

3. Project Management

This chapter presents the project management approach used to organize and guide the development of Maris Habitats. It briefly explains how the team managed scope, time, cost, quality, stakeholders, communication, risk, procurement, and planning. The chapter also describes how Scrum and sprint evaluations were used to support progress and adapt to challenges during the project

3.1 Introduction

Managing a project that intersects marine ecology, hardware engineering, and software development requires a framework that balances rigid constraints with creative flexibility. This chapter details the management strategy employed by the group, organized across key knowledge areas including scope, risk, and procurement.

Due to the unpredictable nature of environmental hardware testing, an Agile methodology (SCRUM based) was adopted. This iterative approach was essential for managing the project. By prioritizing continuous feedback loops and adaptive planning, the team was able to pivot in response to technical challenges without compromising the project's primary milestones or budgetary limits.

3.2 Scope

The scope of this project is the design and development of a functional prototype of a smart marine habitat intended to support seafloor biodiversity and enable environmental monitoring in underwater conditions. The project focuses on creating a concept that combines an artificial habitat structure with a basic sensor system, while taking into account sustainability, durability, and ecological compatibility **[77]**.

From a product perspective, the project includes the development of a modular underwater habitat

structure designed to provide shelter, attachment surfaces, and spatial complexity for marine organisms. In addition, the product includes an integrated monitoring concept based on selected sensors capable of collecting environmental data relevant to the surrounding habitat, such as temperature, pH, turbidity, or depth, depending on technical feasibility and component availability. The solution also includes a basic embedded electronics system for sensor integration, power management, and data handling, as well as a conceptual approach for transmitting or presenting the collected data. The overall product is intended to demonstrate how habitat restoration and environmental monitoring can be combined into a sustainable solution.

From a project perspective, the scope includes the research and analysis required to understand the environmental problem, existing artificial reef solutions, suitable structural materials, and underwater sensor technologies. It also includes the definition of requirements, concept development, design selection, structural modelling, component selection, and prototype integration. The project covers the testing and validation of the prototype under limited and controlled conditions, together with the assessment of market, sustainability, ethical, and project management aspects. The preparation of all academic deliverables, including the report, presentation, poster, flyer, and supporting documentation, is also part of the project scope.

The main outcome of the project is a functional prototype that demonstrates the technical feasibility and conceptual value of a smart artificial marine habitat. The prototype is intended to serve as a foundation for future development, testing, and scaling in real-world marine applications.

The Work Breakdown Structure (WBS) presented in the figures 12 and 13 illustrates how the Maris Habitats system is divided into its main components and subsystems **[78]**. The diagram provides an overview of the product architecture, showing how the habitat structure, sensor system, energy and communication, deployment, and maintenance elements are organized.

Each main component is further broken down into smaller elements, representing the key functionalities required for the system to operate. This visual representation helps clarify the scope of the project by identifying all relevant parts of the system and their relationships.

Figure 12 presents the WBS for the product and Figure 13 the WBS of the project.

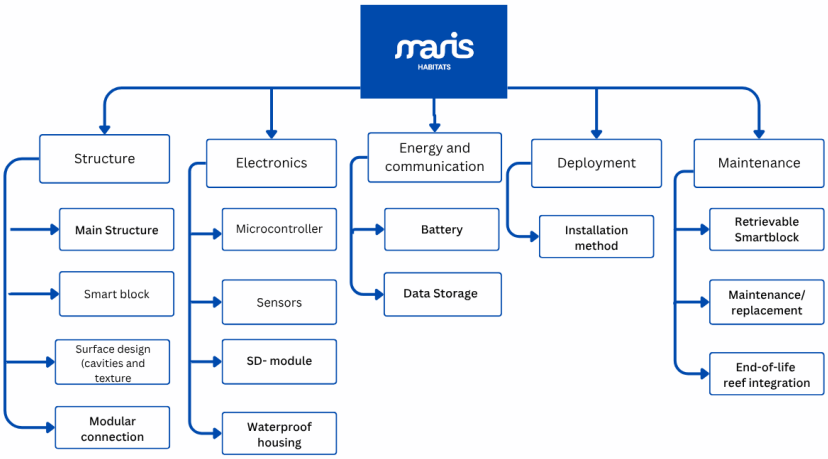

Figure 12: WBS of the product

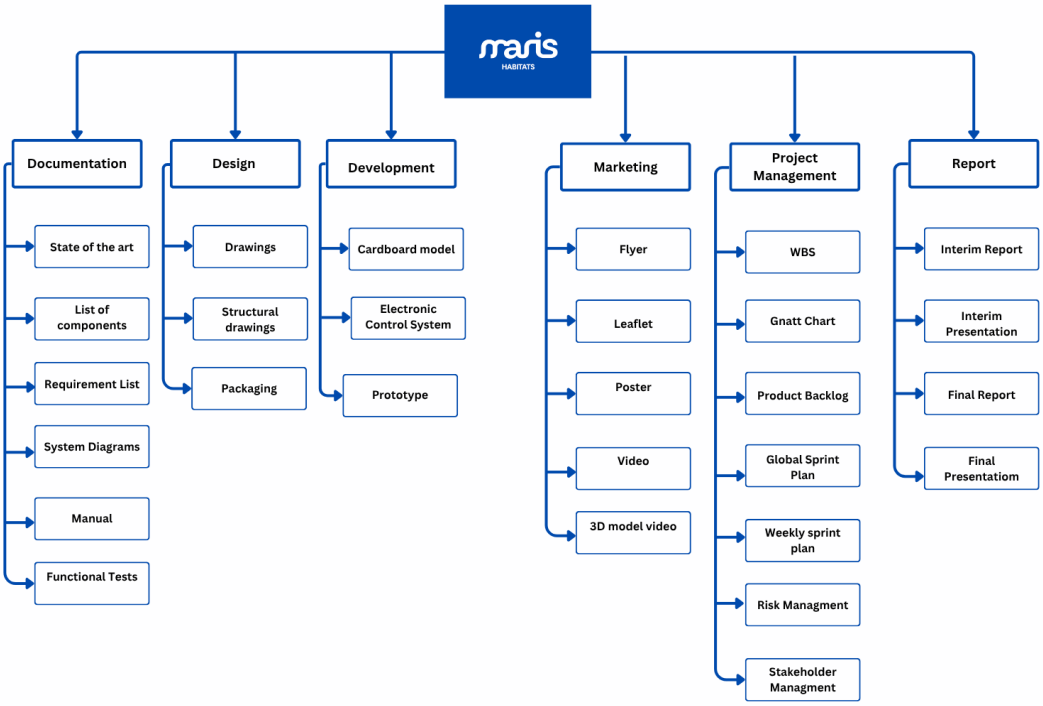

Figure 13: WBS of the project

3.3 Time

To ensure effective time management and the timely completion of the project, tasks were scheduled to be completed during school hours and before weekends. This approach helped maintain steady progress and allowed time for review and adjustments when needed **[79]**.

The team followed the milestone schedule defined by the project supervisors over a total project duration of 118 days, from 2026-02-28 to 2026-06-25. These milestones provided a structured

framework to monitor progress and ensure alignment with the overall project timeline. Table 4 presents the defined milestones.

Table 4: Milestones for the project

Date	Description
2026-02-28	Choose and share your top-3 preferred project proposals via email to epsatisep@gmail.com
2026-03-11	Upload the “black box” **System Diagrams** & **Structural Drafts** to the wiki (Deliverables)
2026-03-18	Upload the **List of Components and Materials (what & quantity)** to the wiki (Deliverables)
2026-03-21	Define the **Project Backlog** (what must be done and key deliverables - every member should preferably participate in every task), **Global Sprint Plan**, **Initial Sprint Plan** (which tasks should be included, who does what) and **Release Gantt Chart** of the project and insert them on the wiki (Report)
2026-03-25	Upload the detailed **System Schematics & Structural Drawings** to the wiki (Deliverables) and do the **cardboard scale model** of the structure
2026-04-12	Upload the **Interim Report and Presentation** to the wiki (Deliverables)
2026-04-16	Interim Presentation, Discussion and Peer, Teacher and Supervisor feedbacks
2026-04-22	Upload **3D model video** to Deliverables
2026-04-29	Upload the final **List of Materials (local providers & price, including VAT and transportation)** to Deliverables
2026-05-02	Upload refined Interim Report (based on Teacher & Supervisor Feedback)
2026-05-13	Upload **packaging solution** to Deliverables and Report
2026-05-27	Upload the results of the **Functional Tests** to the Report
2026-06-13	Upload the **Final Report, Presentation, Video, Paper, Poster and Manual** to Deliverables
2026-06-18	Final Presentation, Individual Discussion and Assessment (reserve the whole day)
2026-06-23	Update the wiki, report, paper with all suggested corrections
	Place in the Shared section of the MS Teams channel of your team a **folder with the refined deliverables (source + PDF) together with all code and drawings produced**
	Hand in to the EPS coordinator a **printed copy of the poster, brochure and leaflet**
2026-06-25	Demonstration of the **operation of the prototype**
	Hand in the **prototype and user manual** to the client
	Receive the **EPS@ISEP certificate**
	Bring **typical food** from your country

3.4 Cost

When estimating the total cost of the project, two main factors must be considered: employee salaries and the cost of materials and components.

The average salary for a junior engineer in Portugal is approximately 1 500 € per month, and the project duration is five months. With a team of six employees, the total salary cost is calculated as: 6 employees × 1 500 € × 5 months = 45 000 €.

The material costs are divided into two categories: components and sensors. The total cost of the electronics and components is 2215.66 €.

A detailed overview of the individual component and sensor costs is provided in Table 5.

Table 5: Components and sensors with price

Item	Type	Price	Quantity	Supplier	Link
Adafruit 254	SD - module	6.45 €	1	Mouser	link
ESP32-C3-DevKitM-1-N4X	Microcontroller	6.80 €	1	Mouser	link
DFR0570	Buck converter	2.80 €	1	Mouser	link
FDMM004GMC-XE00	MicroSD - card	21.88 €	1	Farnell	link
MC3090082	Silica gel (moisture absorber)	42.26 €	1	Farnell	link
LiFePO4 battery	LiFePO4 battery	76.24 €	1	Innpo	link
Watertight Box 5L	Underwater electrical box	805.66 €	1	Bluerobotics	link
WetLink Penetrator Blank	Penetrator blank (M10)	70.50 €	15	Bluerobotics	link
MCMF0W4BB2500A50	160 ohm resistance	0.55 €	1	Farnell	link
Adafruit 2670	Perfboard / Breadboard	4.26 €	1	Mouser	link
M316 SOA2CSS50-	M3 screws for perfboard	5.55 €	1	Farnell	link
BarXT	Depth / Pressure / Temp	329.19 €	1	Bluerobotics	link
Surveyor Analog pH Sensor / Meter	pH surveyor	21.52 €	1	Atlas Scientific	link
Industrial pH Probe – No Temp	pH test probe	226.95 €	1	Atlas Scientific	link
Industrial Conductivity Kit K 1.0	Conductivity	595.05 €	1	Atlas Scientific	link
Total		**2215.66 €**			

In addition to the component costs, supplier shipping costs for the electronic components and sensors must also be taken into account. These are presented in Table 6. Including shipping, the total cost of these components increases to 2526.11 €.

Table 6: Transportation and shipping costs

Supplier	Cost (inc VAT)	Shipping cost	Notes
Innpo	76.24 €	5.08 €	
Mouser	20.31 €	25.00 €	Free over 75 €
Farnell	70.24 €	11.99 €	Free over 75 €
Bluerobotics	1205.35 €	175.33 €	Prices in dollar
Atlas Scientific	843.52 €	93.05 €	Prices in dollar
Total (products)	**2215.66 €**	**310.45 €**	
Grand Total	**2526.11 €**		

The project includes the cost of structural materials used for the habitat modules. Each block/module is composed of approximately 30 kg of concrete (C) and 70–90 g of basalt fiber (BF). These are shown in Table 7.

Table 7: Price of the blocks

Material	Unit price	Quantity per block	Cost per block	Link	Backup
Concrete (C)	89 € / 1000 kg	30 kg	2.67 €	link	—
Basalt Fiber (BF)	34.16 € / 1.36 kg	70–90 g	1.76 €	link	link
Total per block			**4.43 €**		

Based on current market prices, concrete costs 89 € per 1000 kg, while basalt fiber costs 34.16 € per 1.36 kg. This results in an estimated material cost of 2.67 € for concrete and 1.76 € for basalt fiber per block.

Therefore, the total material cost per block is approximately 4.43 €.

It should be noted that this estimate is based on small-scale purchasing prices. For larger production volumes, the cost per unit is expected to decrease due to bulk pricing and supplier agreements.

The total cost of the project, including labor, electronics, components, sensors, transportation and shipping, is estimated to be 47 526.11 €, excluding the structural material cost of the habitat blocks. The structural material cost is estimated at 4.43 € per block, depending on the number of blocks produced.

Table 8: Total cost

Cost category	**Description**	**Total cost**
Labor cost	6 employees × 1 500 € × 5 months	45 000.00 €
Electronics, components and sensors	Total product cost including components and sensors	2 215.66 €
Transportation and shipping	Shipping costs from all suppliers	310.45 €
Total materials and sensors including shipping	Components, sensors and shipping combined	**2 526.11 €**
Structural material for habitat blocks	Concrete and basalt fiber	4.43 € per block
Total project cost excluding habitat blocks	Labor + materials and sensors including shipping	**47 526.11 €**

It is important to note that this cost estimate represents the final product configuration, and not the prototype.

Prototype list

When selecting electronic components for the prototype, efforts were made to replicate the final product as closely as possible within the constraints of a 100 € budget. In addition, components were sourced from as few suppliers as possible in order to minimize transportation and shipping costs.

The selected electronics used in the prototype are presented in Table 9.

Table 9: Prototype electronics

Item	**Type**	**Price**	**Quantity**	**Supplier**	**Link**
DS18B20	Temperature sensor	6.22 €	1	RS	link
SEN0244	TDS sensor	10.18 €	1	Farnell	link
SEN0257	Pressure sensor	15.09 €	1	Farnell	link
Adafruit 254	SD - module	11.60 €	1	RS	link
Arduino ABX00080	Microcontroller	17.44 €	1	Farnell	link
FDMM004GMC-XE00	MicroSD card	21.88 €	1	Farnell	link
4022211111	9 V alkaline battery	5.47 €	1	Farnell	link
MP007080	Battery holder	3.41 €	1	Farnell	link
MOR01SJ0472A10	4.7 kΩ resistor	0.07 €	1	Farnell	link
FIT0096	Breadboard	2.50 €	1	Farnell	link
Total		**93.86 €**			

The estimated total cost of the electronics is 102 €, including shipping, as summarized in Table 10.

Table 10: Prototype shipping costs

Supplier	Cost (inc VAT)	Shipping cost	Notes
RS	17.82 €	8.00 €	Free over 95 €
Farnell	76.04 €	11.99 €	Free over 75 €
Total (products)	**93.86 €**	**8.00 €**	
Total with shipping	**101.86 €**		

For the remaining component selection, suppliers offering local pickup were prioritized in order to avoid additional transportation costs.

These materials are summarized in Table 11.

Table 11: Low-cost prototype materials (Portugal)

Product	Type	Price (incl. VAT)	Quantity	Supplier	Link	Comment
Cement (CEM II 25 kg)	Concrete material	5.39 €	1	Leroy Merlin	link	Used for structural prototype blocks
Plastic lunchbox (single compartment)	Prototype enclosure	3 €	1	IKEA	link	Simple enclosure
Smaller plastic lunchbox	Backup enclosure	1.5 €	1	IKEA	link	Backup option
PLA filament 1 kg	Used for 3D-printed mold	14.60 €	1	Filament 3D	link	Backup option
Ceys Total Tech Universal Glue and Sealant 290 ml Transparent	Silicone sealant	8.99 €	1	Leroy Merlin	link	
Continente cooking oil 1 L	Oil for enclosure	1.69 €	1	Continente	link	Used only if needed
Total		**35.17 €**				

The different prototype cost scenarios are summarized in Table 12, showing how additional materials such as concrete and 3D printing filament affect the overall cost.

Table 12: Prototype cost scenarios

Scenario	Total cost
Prototype (with shipping)	101.86 €
+ Airtight container (IKEA)	104.86 €
+ Silicone sealant	113.85 €
+ Oil	115.54 €
+ Cement	121.19 €
+ PLA (no cement)	130.14 €
+ Cement + PLA	135.53 €

The impact of procurement strategy on shipping costs is shown in Table 13, where the difference between in-store pickup and online ordering is highlighted.

Table 13: Shipping cost comparison for prototype materials

Product	Supplier	Shipping (store pickup)	Shipping (online)	Comment
Cement (CEM II 25 kg)	Leroy Merlin	0 €	TBC at checkout	Shipping depends on address and delivery option
Plastic lunchbox (single compartment)	IKEA	0 €	6 €	Standard small delivery, 4 € with IKEA Family
Smaller plastic lunchbox (backup)	IKEA	0 €	6 €	Standard small delivery, 4 € with IKEA Family
PLA filament 1 kg	Filament 3D	0 €	TBC at checkout	Shipping must be confirmed before purchase
Silicone sealant	Leroy Merlin	0 €	TBC at checkout	Shipping depends on address and delivery option
Oil	Continente	0 €	-	-
Total		**0 €**	**TBC**	

Although the estimated total cost exceeds the budget, some components and materials may already be available at the university, reducing the need for additional purchases. Furthermore, transportation costs may be avoided if other groups are also ordering from the same supplier and the total order exceeds the free shipping limit. Consequently, the actual cost is difficult to determine precisely but is expected to be lower than the estimated 136 €.

The materials that were actually provided for the prototype were similar to the components and materials originally requested by the team. Although some parts differed slightly from the initial list, they fulfilled the same basic purpose and were suitable for building and testing the prototype. The total cost of the provided prototype parts was approximately 90 €.

3.5 Quality

Quality in the project is ensured by defining measurable quality metrics for both the product and the documentation. These metrics help the team evaluate whether the system works as intended, meets the project requirements, and is clearly documented.

For the product, the main quality areas are sensor performance, waterproofing, structural stability, data logging, energy efficiency, maintainability, and environmental compatibility. For the documentation, quality is evaluated through clarity, completeness, structure, and consistency. The metrics are reviewed through prototype testing, design reviews, sprint meetings, and supervisor feedback **[80]** (See Table 14).

Table 14: Product and documentation quality

Metrics	Description	Threshold	Reviewing method
Sensor functionality	Sensors collect environmental data such as temperature, pressure, and TDS.	All prototype sensors provide readable values.	Functional sensor test
Data logging	Sensor data is stored locally on an SD card.	Data is saved in a readable format after each measurement cycle.	SD card inspection

Metrics	Description	Threshold	Reviewing method
Structural stability	Reef blocks remain stable under expected conditions.	Structure does not move easily during controlled testing.	Stability test
Energy efficiency	System uses low power for long-term operation.	Final system supports approximately 340 days of operation.	Battery calculation
Maintainability	Smartlogger can be removed for service.	Battery, SD card, and sensors can be accessed without removing the whole reef module.	Maintenance check
Documentation quality	Report is clear, complete, and well structured.	Required sections, figures, tables, and sources are included.	Internal review and supervisor feedback
Temperature reading	Accuracy of the temperature sensor.	Within ±2 °C of reference thermometer.	Reference thermometer comparison
Logging interval	Accuracy of the time between each saved measurement.	10 seconds ±1 second between logged rows.	Compare timestamps in the CSV file
TDS reading	Accuracy of the TDS sensor response.	Within ±10 % of reference or clearly changes between test samples.	Controlled water sample test
Pressure reading	Stability of the pressure sensor output.	Reading variation less than ±10 % during a stable test condition.	Serial Monitor inspection
Turbidity reading	Response of the turbidity sensor to interruption.	Sensor voltage changes by at least 0.1 V when the sensor area is interrupted.	Turbidity interruption test

Review and Validation Process

The prototype will be checked by testing the main parts one by one. First, the team will confirm that the smartlogger starts correctly and that the sensors give values in the Serial Monitor. Then the SD card file will be opened to check that the values are stored with the correct time interval. The physical prototype will also be checked by measuring the structure, testing that it stands stable. The results from these checks will show whether the prototype is good enough for the final demonstration.

Acceptance Criteria

The prototype is good enough when it can run the logging program, read the sensors, and save data to the SD card without stopping during the test. The structure must also be stable and possible to handle without loose parts or damaged connections. Since this is only a prototype, the goal is to prove that the concept works, not to prove that it is ready for long-term underwater use.

3.6 People

People involved in a project can create uncertainty if responsibilities, communication routines and

workload are not clearly defined. For this reason, people management is important in the Maris Habitats project. The project requires collaboration between team members from different academic backgrounds, including design, electronics, software, documentation, sustainability and project management.

The team does not have one permanent project manager. Instead, all team members share responsibility for project progress, decision-making and following the project scope. Tasks are distributed based on skills, availability, workload and interest in order to make the work more efficient and balanced.

The key factors considered when assigning tasks are:

Skills and expertise

Each team member has different knowledge and technical strengths. Tasks are therefore assigned according to individual skills, such as design, electronics, software, research, communication or documentation. This helps improve the quality of the project outcome.

Roles and responsibilities

Clear roles and responsibilities are important to avoid confusion, duplicated work and missed tasks. Each team member is responsible for completing assigned tasks and communicating progress to the rest of the group.

Availability and workload

The workload should be distributed fairly between team members. Since the project includes many different deliverables, such as the report, prototype, poster, video, manual and presentation, the team must make sure that no member is overloaded.

Interest and motivation

When possible, tasks are assigned according to each member’s interests. This increases motivation, engagement and productivity, while also helping the team produce better results.

Collaboration and team dynamics

Since Maris Habitats is a multidisciplinary project, collaboration is essential. Team members must share information, support each other and communicate regularly to make sure that the structure, smartlogger, documentation and prototype development remain aligned. See Table 15.

Table 15: Table of Roles and Responsibilities

People / Group	**Role**	**Responsibility**
ISEP	Sponsor / Hosting institution	Provides the project framework, facilities, academic structure and evaluation criteria.
Hernán Nieto Marabini	Team member	Participates in research, concept development, design decisions, documentation and project deliverables.
Chaehee Kim	Team member	Participates in research, planning, documentation and project deliverables.
Ida Schmitt	Team member	Participates in visual communication, branding, documentation, design support and project deliverables.
Isak Björk	Team member	Participates in electronics, sensor system development, technical decisions and prototype work.

People / Group	Role	Responsibility
Louis Van Nederkassel	Team member	Participates in product design, structural development, modelling and prototype work.
Oda Kristine Johansen Fossvoll	Team member	Participates in documentation, project management, communication and project deliverables.
EPS Coordinator	Coordinator	Organizes the EPS process, facilitates control meetings and supports project progress.
Project supervisors	Supervisors	Provide technical and academic feedback, guide the team and review project progress.
Professors	Advisors	Provide knowledge, lectures, feedback and resources related to different project areas.

The purpose of this structure is to ensure that all team members understand their responsibilities and contribute to the overall progress of the project. By combining different skills and distributing tasks clearly, the team can reduce uncertainty and improve collaboration throughout the project.

3.7 Stakeholder Management

Stakeholder management is used to identify, analyze and communicate with the people, groups and organizations that can affect or be affected by the project. For Maris Habitats, this is important because the project combines academic requirements, technical development, marine restoration, environmental monitoring and potential future users of the system.

The stakeholders were divided into internal and external groups. Internal stakeholders are directly involved in the project development, such as the team members, EPS coordinator, supervisors and professors. External stakeholders are not part of the daily project work, but they may influence the project or benefit from the final solution. These include suppliers, research institutions, environmental NGOs, public authorities, potential customers and marine life.

To understand how the team should communicate with each stakeholder, a power-interest matrix was created. This matrix shows which stakeholders need close involvement, which should be kept informed, and which only require limited monitoring. Figure 14 presents the stakeholder matrix for Maris Habitats.

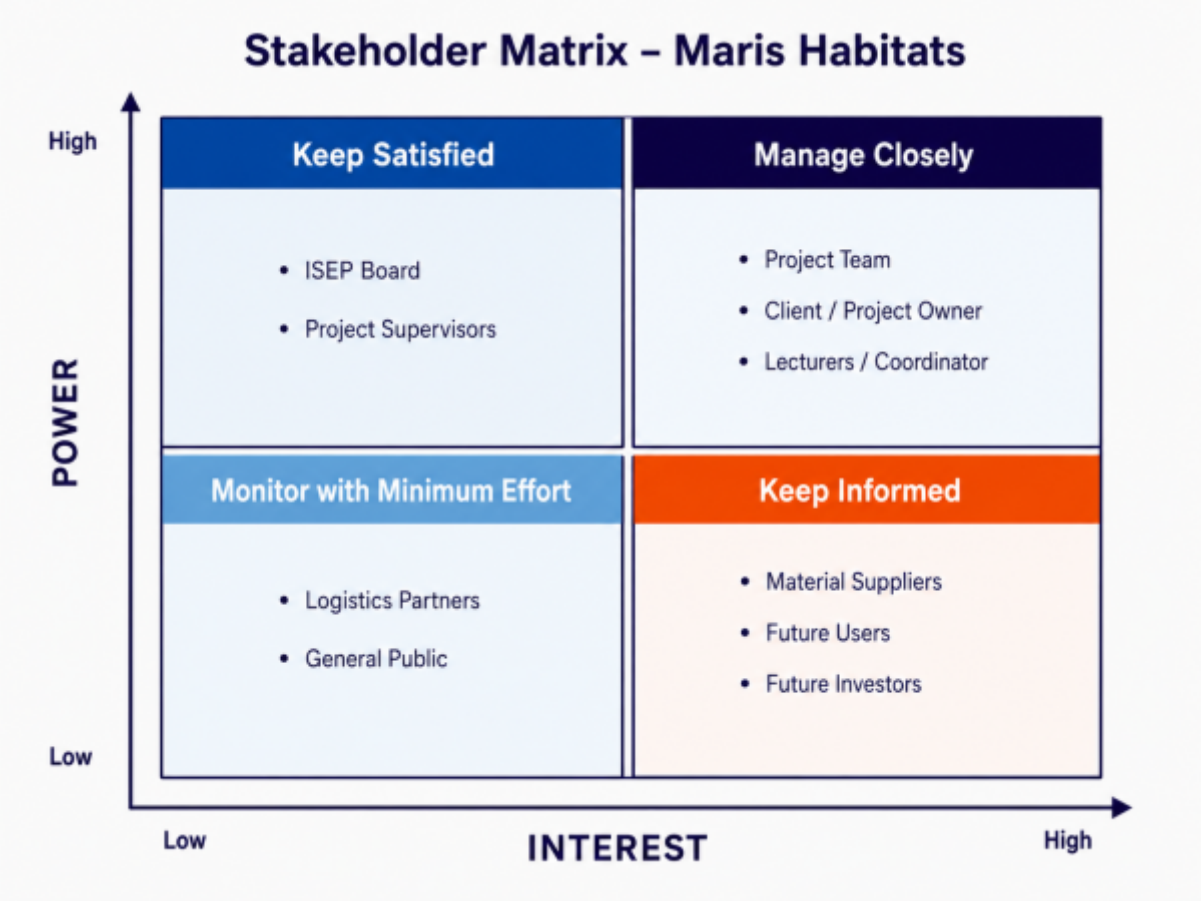

Figure 14: Stakeholder matrix for Maris Habitats

The project team, supervisors, coordinator and client/project owner are placed in the high-interest and high-power category because they are directly connected to project decisions, evaluation and progress. These stakeholders must therefore be managed closely through regular meetings, feedback, documentation and continuous communication.

Stakeholders such as ISEP and project supervisors have strong influence on the academic framework, but they are not involved in every daily task. They should be kept satisfied through formal deliverables, progress updates and clear communication. Future users, research institutions, NGOs and possible investors have high interest in the final product, but limited influence during the current prototype phase. These stakeholders should be kept informed through reports, presentations and future collaboration opportunities. Stakeholders with low power and low interest, such as logistics partners and the general public, only need to be monitored when relevant.

The stakeholder overview in Table 16 gives a more detailed explanation of each stakeholder's role, interest and engagement strategy.

Table 16: Stakeholder Overview

Stakeholder	**Role**	**Interest in the Project**	**Engagement Strategy**
Team members	Project developers	Successful project completion and prototype development	Daily communication, Scrum meetings and Jira updates
EPS Coordinator	Academic coordinator	Ensure that the project follows EPS requirements	Weekly meetings and formal communication
Project supervisors	Academic and technical supervisors	Guide the team and review progress	Weekly meetings, feedback sessions and email

Stakeholder	Role	Interest in the Project	Engagement Strategy
ISEP	Hosting institution	Provide academic framework, resources and evaluation	Deliverables, presentations and project documentation
Professors	Advisors	Support learning and provide expert feedback	Classes, feedback sessions and report review
Suppliers	Component providers	Supply materials, sensors and electronics	Email, supplier websites and procurement planning
Research institutions	Future users / partners	Use environmental data for research and monitoring	Reports, presentations and future collaboration
Environmental NGOs	Future users / partners	Support marine conservation and restoration	Project presentations and sustainability documentation
Public authorities	Regulators / potential customers	Environmental management and deployment approval	Formal documentation and future permit processes
Marine infrastructure companies	Potential customers / partners	Combine infrastructure with environmental monitoring	Technical presentations and pilot projects
Marine life	Primary beneficiary	Safe habitat, shelter and ecosystem support	Environmentally safe design and long-term monitoring

The main engagement strategy is based on regular communication and clear documentation. Internal stakeholders are involved through weekly supervisor meetings, team meetings, Jira updates and wiki documentation. Feedback from supervisors and professors is used to improve the design, prototype, report and final deliverables.

For external stakeholders, the engagement strategy is more focused on presenting the value and feasibility of the concept. This includes explaining how Maris Habitats can support marine restoration, collect environmental data and reduce disturbance through the removable smartlogger.

Stakeholder-related risks include unclear communication, delayed feedback, supplier delays and misunderstandings about project expectations. These risks are reduced through regular meetings, defined responsibilities, updated documentation and early procurement planning.

Stakeholder management helps the team keep the project aligned with academic expectations, technical requirements and future user needs. It also supports better decision-making and improves the feasibility of Maris Habitats as a marine restoration and monitoring solution **[81]**.

3.8 Communications

Effective communication is important to ensure coordination, transparency and steady progress throughout the Maris Habitats project. Since the team consists of members from different academic backgrounds and nationalities, clear communication routines are necessary to avoid misunderstandings, distribute tasks effectively and keep all project work aligned **[82]**.

Guidelines for Meetings

Meeting agenda

For the weekly supervisor meetings, a meeting agenda is prepared before the meeting. The agenda includes the main topics to be discussed, current progress, challenges, questions for the supervisors

and tasks that need clarification. This helps the team use the meeting time efficiently and ensures that important issues are addressed.

Meeting minutes

Meeting minutes are written after the weekly meetings and uploaded to the wiki or shared with the team. The minutes summarize the topics discussed, feedback received, decisions made and new tasks or agreements. This makes it easier for all team members to follow up on responsibilities and keep track of project progress.

Pitch

One person is responsible for leading the pitch and making sure that the agenda is followed. This role can change between meetings depending on the topic being discussed and the team member responsible for that area.

Note taker

The note taker documents the main points discussed during the meeting. This includes supervisor feedback, decisions, action points and deadlines. The note taker is also responsible for helping update the meeting minutes.

Time keeper

The time keeper helps the team stay within the planned meeting time. During supervisor meetings, this responsibility is usually supported by the supervisors or professors, while in internal meetings the team members manage the time together.

Table 17 shows the type of communications during the project.

Table 17: Communication Matrix

Communication type	Objective	Medium	Frequency	Audience	Deliverable
Kickoff meeting	Introduce team members, discuss project proposals and define the project direction.	Face to face	Once	Team members	Initial project idea
Daily Scrum meeting	Share completed work, current tasks and possible obstacles.	Face to face / WhatsApp	Daily or as needed	Team members	Task updates
Weekly supervisor meeting	Review project status, receive feedback and clarify technical or project-related issues.	Face to face	Weekly, every Thursday	Team members and supervisors	Meeting agenda, meeting minutes and updated tasks
Project team meeting	Discuss design decisions, divide tasks and solve project issues.	Face to face / online	As needed	Team members	Jira updates and task allocation

Communication type	Objective	Medium	Frequency	Audience	Deliverable
Documentation updates	Keep the wiki and report updated with current project progress.	Wiki / Microsoft Teams	Weekly or after major updates	Team members and supervisors	Updated wiki/report
Procurement communication	Contact suppliers, compare prices and clarify component availability.	Email / supplier websites	As needed	Team members and suppliers	Component list and procurement updates

Communication Tools and Means

Microsoft Teams is used as the main platform for receiving information, resources and announcements from professors and supervisors. It is also used to access shared project material.

Outlook is used for formal communication with professors, supervisors and external contacts. This includes meeting-related communication, questions and supplier contact when needed.

WhatsApp is used for fast internal communication between team members. It is mainly used for daily updates, quick questions, reminders and urgent issues that need to be solved quickly.

Jira is used as the main project management tool. The team uses Jira to organize tasks, update progress, manage sprint work and track responsibilities.

The wiki is used as the main documentation platform. Project information, report content, deliverables, meeting minutes and progress updates are uploaded there throughout the project.

This communication structure helps the team maintain a clear workflow, follow deadlines and solve problems early. Regular meetings, shared documentation and continuous task updates support collaboration and ensure that all members remain informed about the development of Maris Habitats. See 18 table for the communication approaches with stakeholders.

Table 18: Communication Approaches to Stakeholders

People / Stakeholder	Role	Approach	Frequency
Hernán Nieto Marabini	Team member	Face to face / WhatsApp / Jira	Daily
Chaehee Kim	Team member	Face to face / WhatsApp / Jira	Daily
Ida Schmitt	Team member	Face to face / WhatsApp / Jira	Daily
Isak Björk	Team member	Face to face / WhatsApp / Jira	Daily
Louis Van Nederkassel	Team member	Face to face / WhatsApp / Jira	Daily
Oda Kristine Johansen Fossvoll	Team member	Face to face / WhatsApp / Jira	Daily
Project supervisors	Academic and technical guidance	Weekly meetings / email	Weekly
Professors	Academic advisors	Classes / Microsoft Teams / email	As needed
EPS coordinator	Project coordination	Microsoft Teams / email	As needed
Suppliers	Component and material providers	Email / supplier websites	As needed
Research institutions, NGOs and public authorities	Potential future users or partners	Email / presentations / reports	Future project phase

3.9 Risk

The project involves several potential risks related to both technical and organizational aspects. One of the main risks is technical failure, particularly in the integration of sensors, electronics, and structural components in a marine-like environment. To reduce this risk, the system is tested in controlled conditions and components are selected based on reliability and compatibility.

Another significant risk is project delays due to time constraints and task dependencies. This is managed through sprint planning, regular meetings, and the use of buffer time to accommodate unforeseen issues.

There is also a risk related to limited resources, including budget constraints and access to specialized equipment or testing environments. This is addressed by prioritizing essential features and selecting cost-effective solutions **[83]**.

Team-related risks such as miscommunication or uneven workload distribution may affect progress. These risks are mitigated through regular Scrum meetings, clear task allocation, and continuous collaboration among team members (see Table 19).

Table 19: Table of different risks

Risk	**Description**	**Probability**	**Impact**	**Risk Level**	**Mitigation Strategy**
Technical failure (sensors/electronics)	Failure in integration of sensors, electronics, and structure in marine conditions	Medium	High	High	Test components and validate system
Power system failure (battery/solar)	Unstable or insufficient energy supply affecting system performance	Medium	High	High	Optimize energy use and include backup
Integration issues (hardware/software)	Difficulties combining system components effectively	Medium	High	High	Modular design and incremental testing
Project delays	Delays caused by time constraints and task dependencies	Medium	High	High	Sprint planning, regular meetings, and buffer time
Limited resources	Budget constraints and limited access to equipment or testing environments	Medium	Medium	Medium	Prioritize essential features and use cost-effective solutions
Team miscommunication	Lack of coordination or unclear communication within the team	Low	Medium	High	Regular Scrum meetings and clear communication
Uneven workload distribution	Some team members contribute less, affecting progress	Low	Medium	Low	Clear task allocation and team collaboration
Corrosion of metallic components	Degradation due to exposure to saltwater	Medium	Medium	Medium	Use corrosion-resistant materials (BFRP, coatings)

Risk	Description	Probability	Impact	Risk Level	Mitigation Strategy
Extreme weather (storms, currents)	Harsh conditions affecting stability and performance	Low	High	Medium	Stable structure and secure anchoring
Waterproofing failure (IP68 breach)	Water entering electronic components causing malfunction	Low	High	High	Seal testing and proper enclosure
Data transmission failure	Loss or interruption of data communication	Medium	Medium	Medium	Local data storage and redundancy

To further support the risk assessment, a risk matrix based on probability and impact was used. The matrix classifies risks into three categories: low, medium, and high, depending on their likelihood of occurrence and potential impact on the project.

Based on this matrix, risks such as technical failure, power system failure, integration issues, and project delays are classified as high risk, as they combine medium to high probability with high impact. These risks require priority attention and mitigation (see Figure 15).

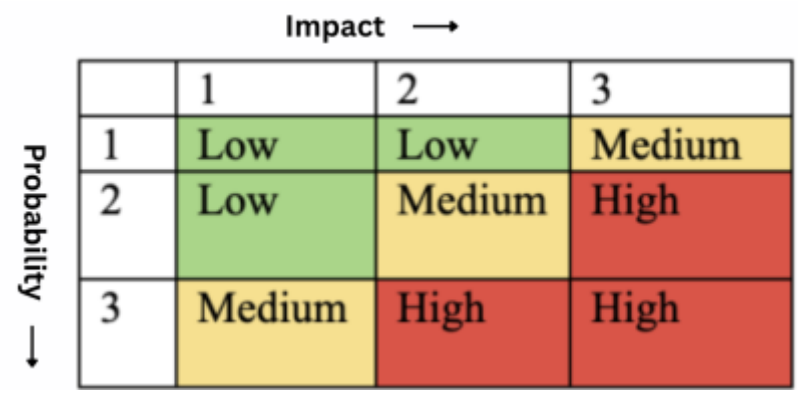

Figure 15: Risk matrix

Risks such as limited resources, corrosion, extreme weather conditions, and data transmission failure fall into the medium-risk category. These are monitored and addressed through preventive design measures and planning.

Lower-risk factors, including team miscommunication and uneven workload distribution, are classified as low risk, as they have limited impact and can be managed through regular communication and task organization.

The use of this risk matrix provides a clear and structured way to prioritize risks and supports more effective decision-making throughout the project **[84]**.

3.10 Procurement

The procurement plan is presented in three tables. Table 20 provides an overview of the electrical components required for the habitat, while Table 21 presents the material composition and cost of the concrete blocks used in the habitat structure.

Each item includes both a primary supplier and a designated backup supplier, ensuring supply

reliability and reducing the risk of delays due to stock shortages or delivery issues.

Table 20: Table of components with backup suppliers

Item	Type	First supplier	Price	Link	Backup supplier	Price	Link
BarXT	Depth / Pressure / Temp	Bluerobotics	329.19 €	link	RobotShop	424.90 €	link
Surveyor™ Analog pH Sensor / Meter	Ph surveyor	Atlas Scientific	21.52 €	link	RobotShop	27.95 €	link
Industrial pH Probe – No Temp	Ph test probe	Atlas Scientific	226.95 €	link	RobotShop	296.31 €	link
Industrial Conductivity Kit K 1.0	Conductivity	Atlas Scientific	595.05 €	link	Augswan	569.99 €	link
Adafruit 254	SD - module	Mouser	6.45 €	link	Farnell	7.11 €	link
ESP32-C3-DevKitM-1-N4X	Microcontroller	Mouser	6.80 €	link	Digikey	6.80 €	link
DFR0570	Buck converter	Mouser	2.80 €	link	Digikey	2.85 €	link
FDMM004GMC-XE00	MicroSD - card	Farnell	21.88 €	link	Digikey	21.70 €	link
MC3090082	Silica gel (moisture absorber)	Farnell	42.26 €	link	Amazon	55.41 €	link
LiFePO4 battery	LiFePO4 battery	Innpo	76.24 €	link	Amazon	80.31 €	link
Watertight Box 5L	Underwater electrical box	Bluerobotics	805.66 €	link	RobotShop	1 075.70 €	link
WetLink Penetrator Blank	Penetrator blank (M10) 15 pce	Bluerobotics	70.50 €	link	Robotshop	100.50 €	link
MCMF0W4BB2500A50	160 ohm resistance	Farnell	0.55 €	link	Digikey	1.87 €	link
Adafruit 2670	Perfboard / Breadboard	Mouser	4.26 €	link	Digikey	4.21 €	link
M316 SOA2CSS50-	M3 screws for perfboard	Farnell	5.55 €	link	Amazon	6.92 €	link
Total			**2215.66 €**			**2682.53 €**	

Table 21: Table of the concrete blocks

Material	First supplier	Price/kg	Link	Backup supplier	Price/kg	Link
Concrete (C)	Leroy Merlin	0.09 €	link	Närpes Byggcenter	0.20 €	link
Basalt Fiber (BF)	Amazon	25.10 €	link	Moertelshop	41.40 €	link
Total		**25.19 €**			**41.40 €**	

3.11 Project Plan

3.11.1 Gantt Chart

The project schedule was visualized using a Gantt chart to illustrate the timeline and key phases of the project.

As shown in Figure 16, the project timeline spans from March to June and includes overlapping phases such as research, prototype development, and documentation.

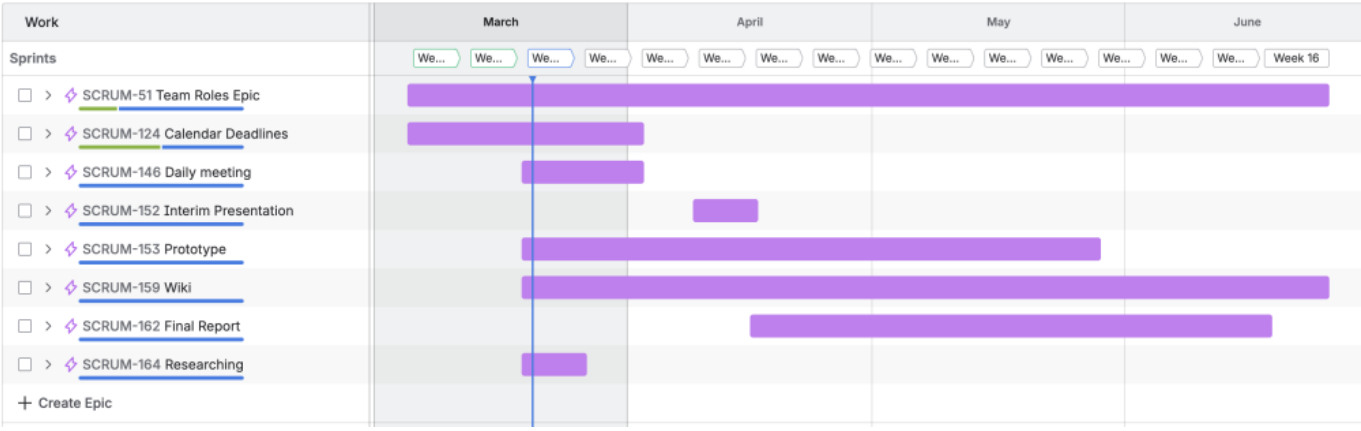

Figure 16: Gantt chart showing the project timeline from March to June.

3.11.2 Global Sprint

The global sprint plan provides an overview of the project timeline, including the duration of each sprint, start and end dates, and the number of available working days. Its main purpose is to ensure a realistic distribution of workload based on the team's availability throughout the project period. See Table 22 for the global sprint plan.

By defining how long each sprint lasts and how many working days are available, the team can better plan tasks and avoid overloading specific periods. Variations in working days reflect differences in availability, such as holidays or other commitments, which allows for more accurate and achievable planning.

Table 22: Table of Global Sprint Plan.

Sprint	Start	Finish	Working Days	Status
1	5 Mar	12 Mar	5 days	Done
2	12 Mar	19 Mar	5 days	Done
3	19 Mar	26 Mar	5 days	Done
4	26 Mar	2 Apr	5 days	Done
5	2 Apr	9 Apr	0 days	Done
6	9 Apr	16 Apr	3 days	Done
7	16 Apr	23 Apr	5 days	Done
8	23 Apr	30 Apr	5 days	Done
9	30 Apr	7 May	3 days	Done
10	7 May	14 May	3 days	Done
11	14 May	21 May	5 days	Done
13	28 May	4 Jun	5 days	Done
14	4 Jun	11 Jun	5 days	Done
15	11 Jun	18 Jun	5 days	Done
16	18 Jun	25 Jun	5 days	Done

3.11.3 Backlog

The project backlog contains all identified tasks required to complete the project. Tasks are continuously updated and prioritized based on project needs, deadlines, and dependencies. Completed tasks are marked as "Done", while ongoing and future tasks are labeled accordingly. Table 23 lists the backlog.

Table 23: Table of Backlog.

PBI	Title	Status
A	Define project	Done
B	System diagrams and structural plans	Done
C	Project backlog	Done
D	State of the Art	Done
E	Gantt chart	Done
F	System diagrams and drafts	Done
G	Global sprint plan	Done
H	List of components and materials	Done
I	Schematics and structural drawings	Done
J	Design development	Done
K	Interim deliverables	Done
L	3D model and video	Done
M	Interim report and presentation	Done
N	Functional testing	Done
O	Packaging solution	Done
P	Poster	Done
Q	Folder and manual	Done
R	Brochure and leaflet	Done
S	Prototype	Done
T	Video	Done
V	Final report	Done
W	Upload final deliverables	Done
X	Final presentation	Done
Y	Final review and submission	Done

3.11.4 Initial Sprint Plan

Sprint 1 (Week 3: 19 Mar – 26 Mar)

Sprint Goal: Establish the project foundation by defining roles, conducting initial research, and setting up key project documentation (see Table 24).

Table 24: Initial Sprint Plan.

Sprint	Period	Sprint Goal	Task
1	19 Mar – 26 Mar	Establish project foundation	Selection of materials
1	19 Mar – 26 Mar	Establish project foundation	Backlog, global & initial sprint plan, Gantt chart
1	19 Mar – 26 Mar	Establish project foundation	Detailed schematics
1	19 Mar – 26 Mar	Establish project foundation	Researching information
1	19 Mar – 26 Mar	Establish project foundation	Define project roles
1	19 Mar – 26 Mar	Establish project foundation	Flyer & logo presentation
1	19 Mar – 26 Mar	Establish project foundation	Cardboard model
1	19 Mar – 26 Mar	Establish project foundation	Wiki updates
1	19 Mar – 26 Mar	Establish project foundation	Daily scrum meetings
1	19 Mar – 26 Mar	Establish project foundation	Selection of components
1	19 Mar – 26 Mar	Establish project foundation	Structural drawing

The tasks in the sprint were divided into smaller activities, including research, documentation, design, and planning, in order to ensure efficient progress. Responsibilities were distributed among team members based on their respective roles, with a focus on areas such as research, documentation, and design. By the end of the sprint, key project elements such as clearly defined team roles, initial research, and planning documents had been completed, providing a solid foundation for the subsequent sprints.

3.12 Sprint Outcomes

The sprints officially started from March 19th to March 26th, as the previous weeks were mainly used to become familiar with Jira and project tools.

An overview of the outcomes from the initial sprints is presented in Table 25 and Table 26.

Table 25: Week 1 outcome

Sprint	Period	Objective	Activities	Outcome
1	Week 1	Define project scope and direction	Brainstorming of project ideas, discussion of possible approaches, evaluation of feasibility	Selection of project concept and initial understanding of project scope

Table 26: Week 2 outcome

Sprint	Period	Objective	Activities	Outcome
2	12 Mar – 19 Mar	Develop system concept and research state of the art	Continued research on artificial reefs and sensors, worked on the state of the art chapter, explored materials and structural ideas, started defining system components, followed milestone plan	Clearer understanding of technical solutions and initial system concept defined

Sprint 3

The burndown chart for sprint 3 shows that additional tasks were identified and added at the beginning of the sprint, resulting in an increase in the total amount of work. This reflects a better understanding of the project requirements as the team moved from concept to design.

During the middle of the sprint, progress remained relatively stable, indicating that fewer tasks were completed in that period. Towards the end of the sprint, a significant decrease in remaining work can be observed, showing that most tasks were completed close to the deadline.

This pattern indicates that the team made substantial progress during sprint 3, particularly in the final phase, where key design elements and system components were defined. It also highlights the need for improved task distribution to ensure more consistent progress throughout the sprint (see Figure 17).

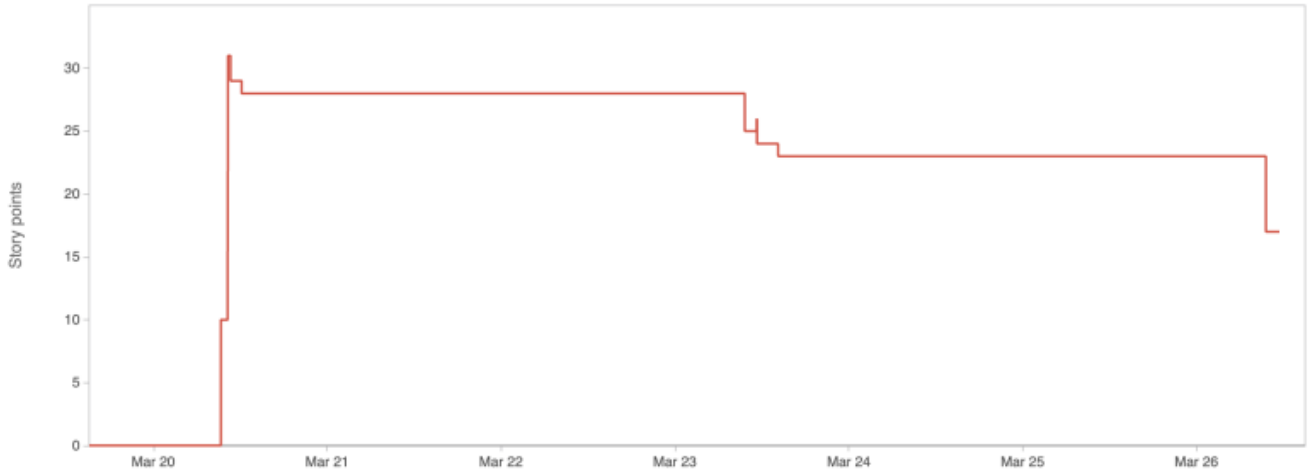

Figure 17: Week 3 burndown chart

Sprint 4

The burndown chart for Sprint 4 shows a noticeable increase in workload at the beginning of the sprint, indicating that additional tasks were identified as the project scope became clearer. This reflects an ongoing refinement of requirements and system definition. Shown in Figure 18.

Throughout most of the sprint, progress was relatively slow, with only minor reductions in remaining work. A more significant decrease occurs towards the end, suggesting that many tasks were completed close to the deadline.

This pattern indicates that work was concentrated in the final phase of the sprint. Although the planned objectives were achieved, this approach suggests a need for better time management and a more even distribution of tasks across the sprint.

Figure 18: Week 4 burndown chart

Sprint 5

The burndown chart for Sprint 5 shows no significant changes in the remaining workload throughout most of the sprint. This indicates that tasks were not actively tracked or completed within the sprint period. Week 5 is shown in Figure 19.

This sprint coincided with the Easter holiday, during which no substantial work was carried out. Additionally, the project management tool (Jira) was not updated during this period, resulting in a lack of visibility and progress tracking.

The sprint did not function as intended and cannot be considered effective from an Agile perspective. The absence of recorded progress highlights the importance of maintaining consistent engagement and updating project management tools, even during periods of reduced activity.

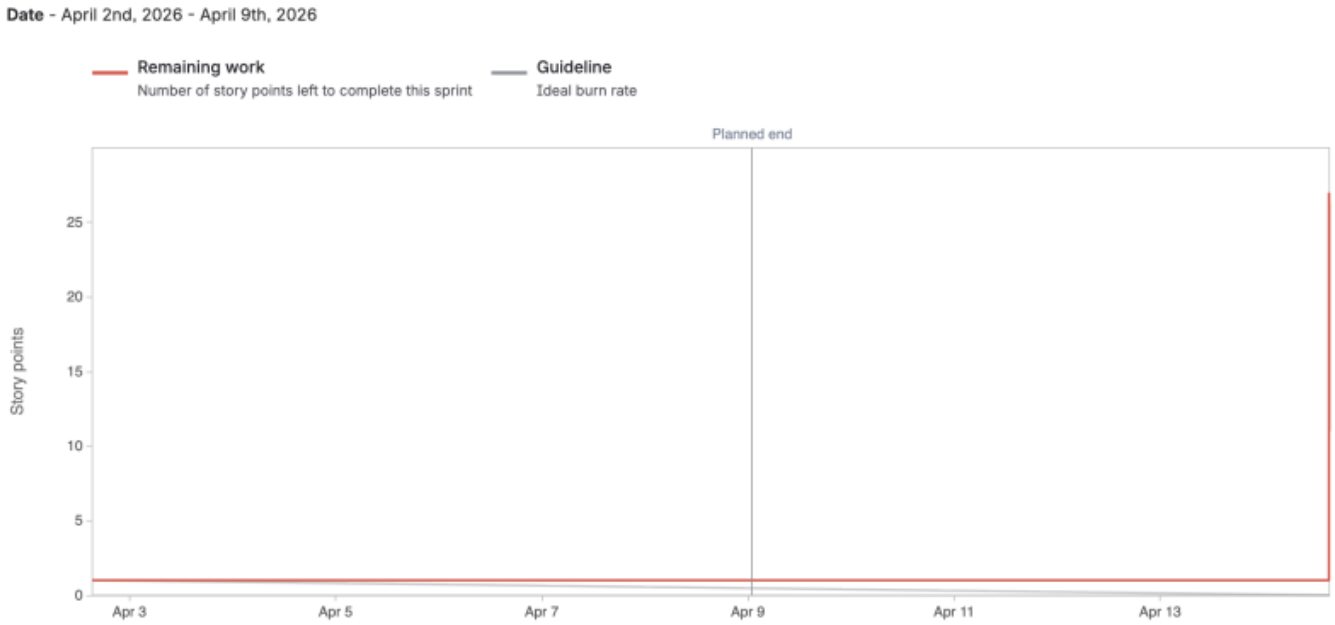

Figure 19: Week 5 burndown chart

Sprint 6

The burndown chart for Sprint 6, shown in Figure 20, indicates limited progress during the initial phase of the sprint, suggesting that relatively little work was carried out at the beginning of the period.

An increase in the remaining workload can also be observed on April 14th, when new tasks were added after the sprint had already started. This was partly caused by incomplete tasks from Sprint 5 being carried over into Sprint 6. As a result, the workload appears to increase rather than decrease at that stage.

Towards the end of the sprint, a noticeable reduction in remaining work is observed, indicating that several tasks were completed before the sprint was concluded.

This pattern reflects an improvement in task completion compared to the previous sprint. However, it also highlights the importance of maintaining consistent progress and timely updates in order to ensure accurate tracking and effective sprint execution.

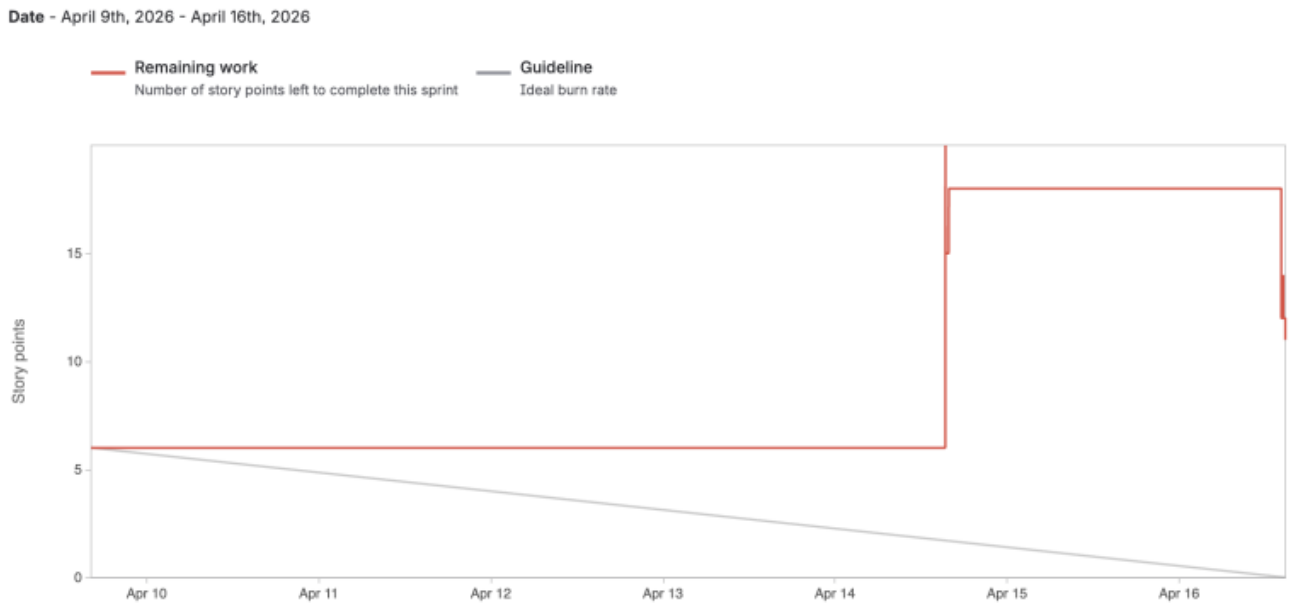

Figure 20: Week 6 burndown chart

Sprint 7

The burndown chart for Sprint 7 shows that little or no progress was recorded during the first part of the sprint. No significant task completion was registered until April 20th, when a new task was added to the sprint. Most of the remaining work was then checked off on the final day of the sprint. This indicates that tasks were either completed late or not updated continuously in Jira. As a result, the burndown chart does not show a steady reduction in workload. This sprint demonstrates the importance of updating tasks more regularly and ensuring that work is distributed more evenly throughout the sprint. The burndown chart for Sprint 7 is shown in Figure 21.

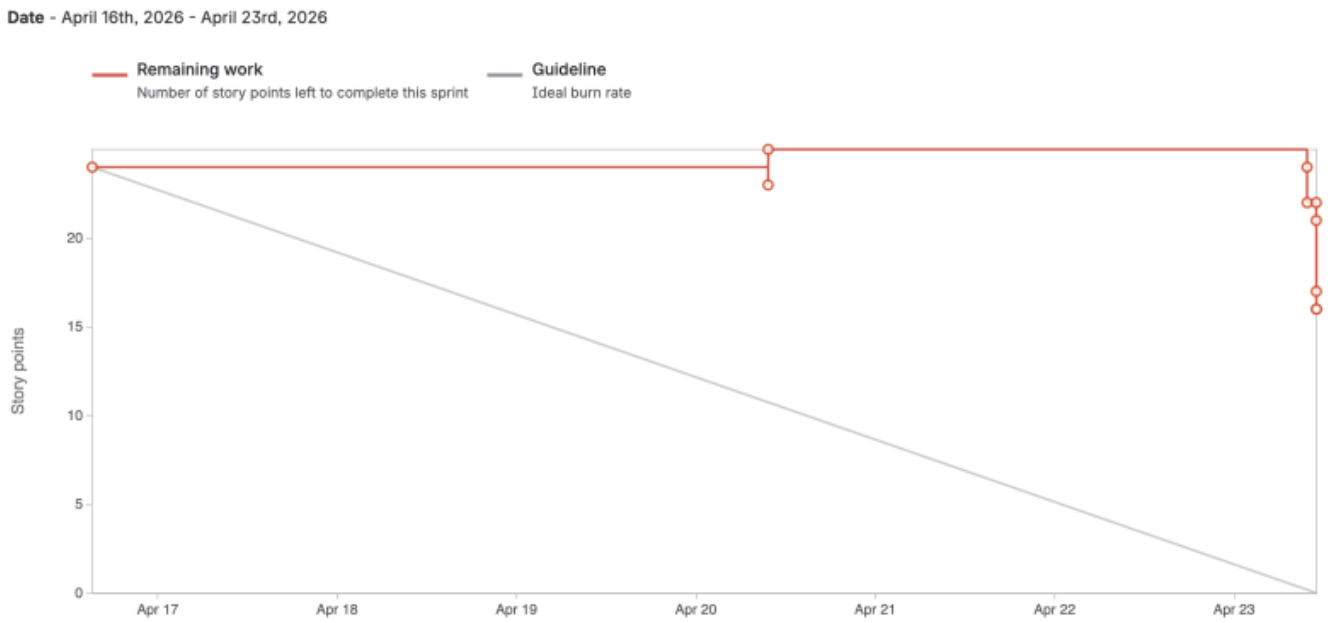

Figure 21: Week 7 burndown chart

Sprint 8

The burndown chart for Sprint 8 shows that the sprint was started before all tasks had been properly added and assigned story points. This made the initial sprint planning less accurate and reduced the reliability of the burndown chart.

During the sprint, the workload was adjusted again. On April 28th, story points were added or changed, which affected the chart after the sprint had already started. Despite these changes, all tasks were completed by the end of the sprint.

Although the final outcome was positive, the chart shows that the sprint was not planned according to Scrum principles, since tasks and story points should ideally be defined before the sprint begins. The burndown chart for Sprint 8 is shown in Figure 22.

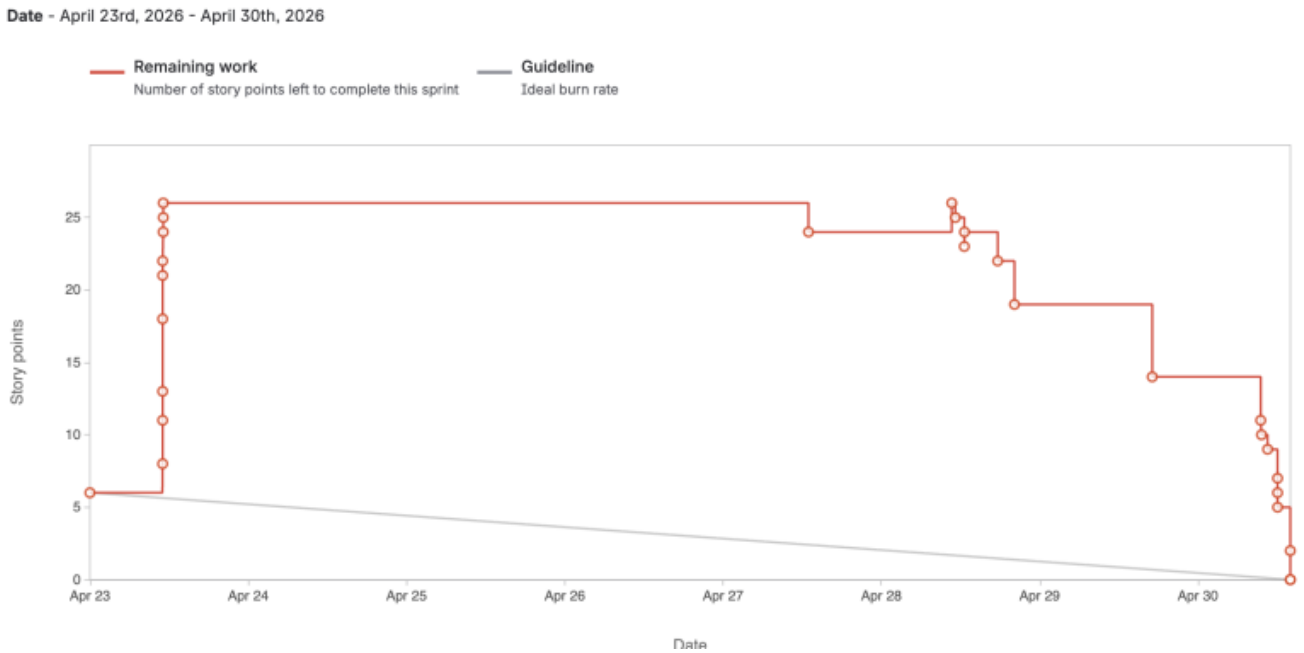

Figure 22: Week 8 burndown chart

Sprint 9

The burndown chart showed a more positive development during sprint 9 shown in shown in Figure 23. This was mainly because no new tasks were added throughout the week, and completed tasks were checked off regularly. However, the sprint contained relatively few tasks, and several of the tasks that were completed were finished early in the sprint. The remaining tasks were more extensive and required more time than expected, which resulted in them being moved to the next sprint.

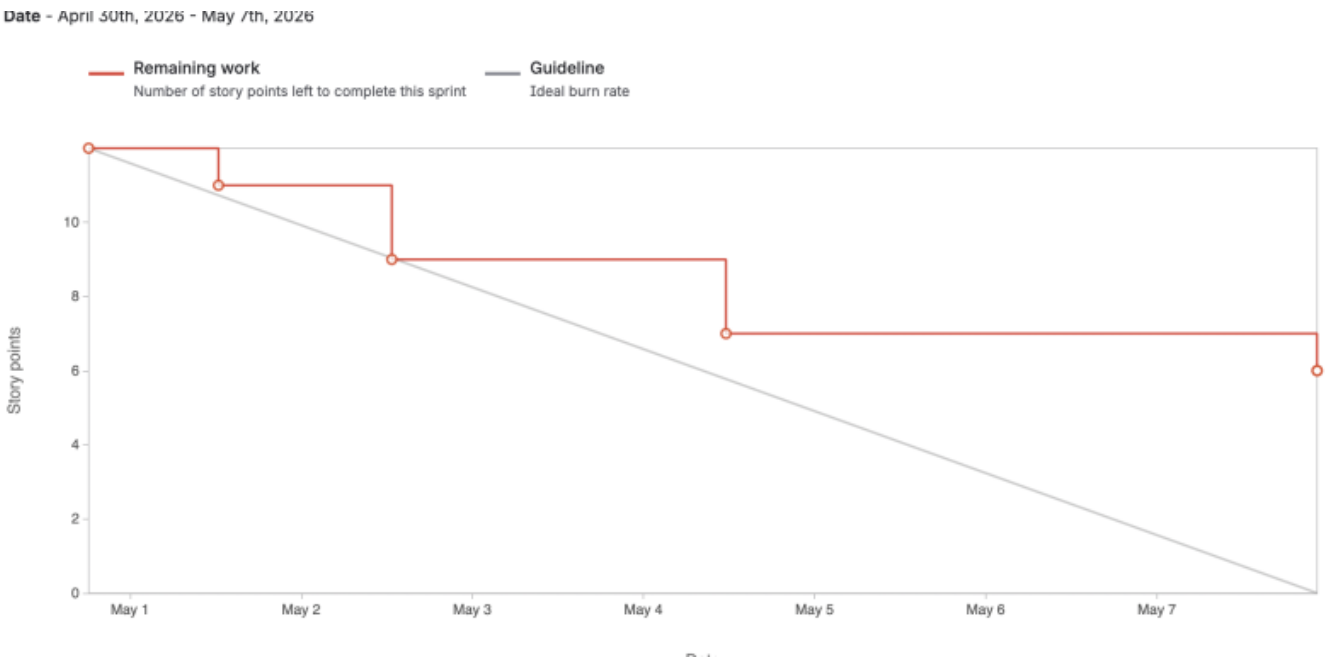

Figure 23: Week 9 burndown chart

Sprint 10 Sprint 10 was a short sprint with only two working days. The sprint contained relatively few tasks, and most of them were completed steadily during the sprint period. However, one task was added after the sprint had already started. This is not ideal according to Scrum principles, because the sprint backlog should normally be defined before the sprint begins. Adding tasks during the sprint can make the burndown chart less accurate and affect the team's ability to evaluate progress correctly.

Despite this, the sprint was mostly successful because the planned workload was limited and the tasks were completed within the short sprint period. The burndown chart for Sprint 10 is shown in Figure 24.

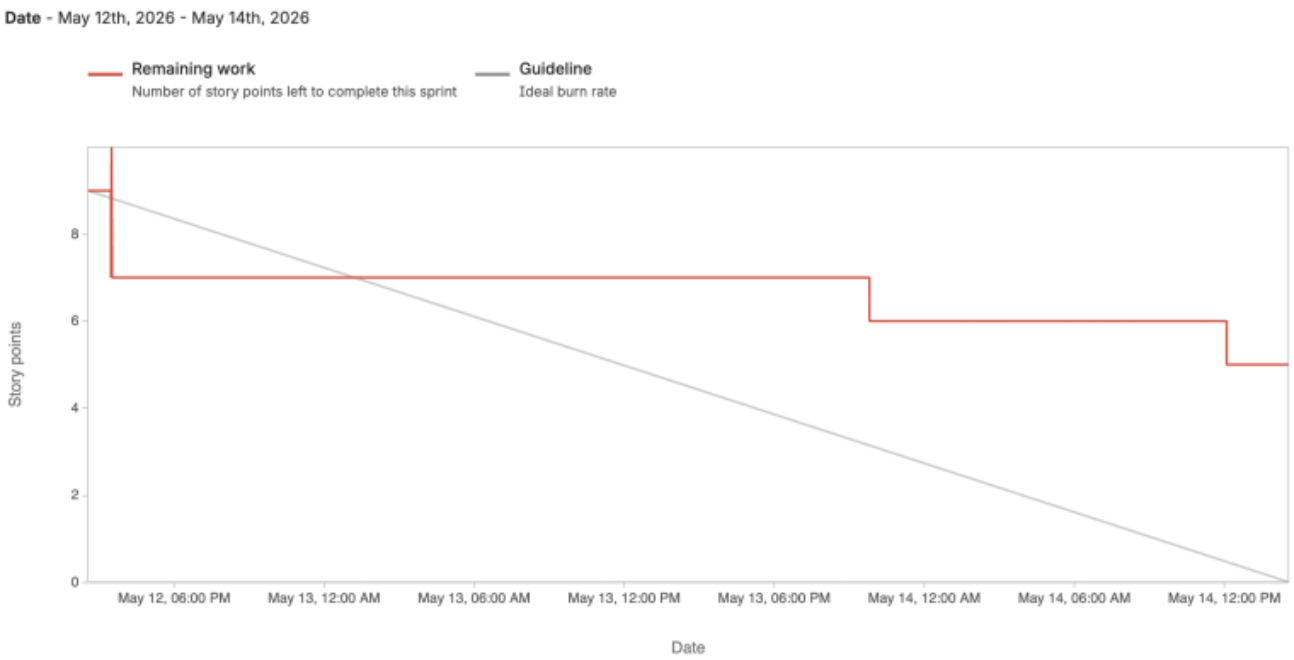

Figure 24: Week 10 burndown chart

Sprint 11 The burndown chart for Sprint 11 shows that no significant progress was recorded until the final day of the sprint. This indicates poor workload distribution, as most tasks were either completed late or not updated in Jira during the sprint. The lack of progress during the earlier part of the sprint made it difficult to track whether the team was on schedule. It also reduced the usefulness of the burndown chart as a project management tool. This sprint highlights the need for better time management, earlier task completion, and more regular updates in Jira. The burndown chart for Sprint 11 is shown in Figure 25.

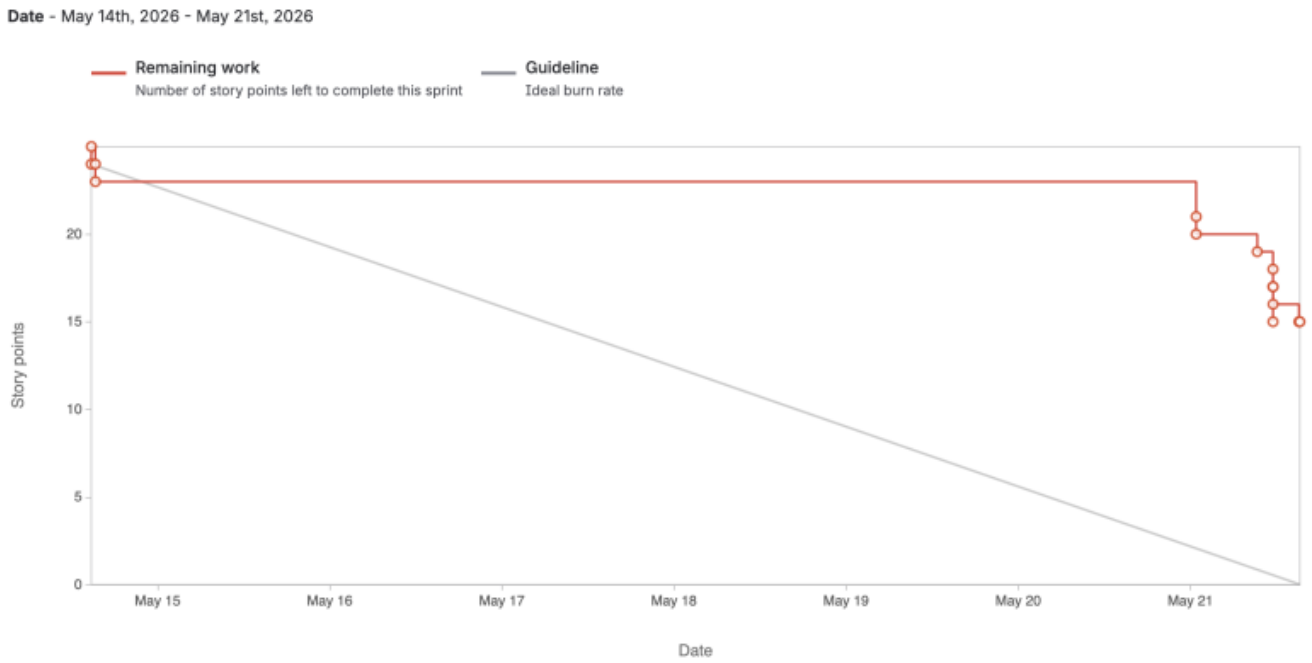

Figure 25: Week 11 burndown chart

Sprint 12 The burndown chart for Sprint 12 shows that limited progress was made at the beginning of the sprint. As in previous sprints, a new task was added after the sprint had already started, which changed the sprint scope during the sprint period. At the same time, one task was completed and checked off, resulting in some reduction in remaining work. By the end of the sprint, only two incomplete tasks remained. This shows that the team made progress and completed most of the planned work, even though the sprint planning was not fully stable from the beginning. Sprint 12 shows an improvement compared with earlier sprints, but it also demonstrates that tasks should be added and estimated before the sprint starts to improve planning accuracy. The burndown chart for Sprint 12 is shown in Figure 26.

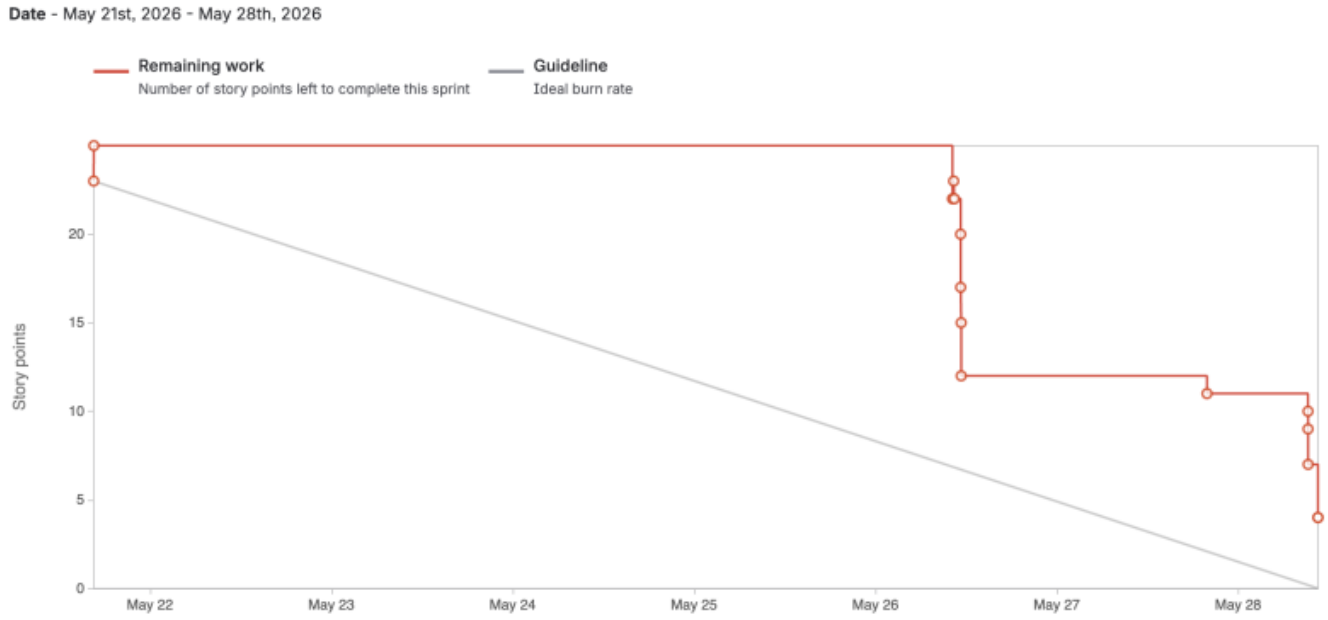

Figure 26: Week 12 burndown chart

Sprint 13 The burndown chart for Sprint 13 shows that no significant progress was recorded until June 1st. On this date, a new task was added to the sprint and assigned story points, which increased the total workload after the sprint had already started. The sprint was also closed one day earlier than planned. As a result, several tasks were not completed during Sprint 13 and had to be transferred to

the Week 14 sprint. This affected the accuracy of the sprint outcome and shows that the planned workload was not fully achieved. On June 3rd, a significant part of the sprint work was completed or closed. However, because several tasks had already been moved forward, the sprint does not show a steady or fully successful workflow. Sprint 13 highlights challenges related to late task creation, incomplete sprint execution, and early sprint closure. It also shows the importance of completing and updating tasks within the correct sprint period to ensure accurate progress tracking. The burndown chart for Sprint 13 is shown in Figure 27.

Figure 27: Week 13 burndown chart

Sprint 14 The burndown chart for the sprint from June 3rd to June 11th shows that the remaining work did not decrease steadily according to the ideal guideline. During the first part of the sprint, progress was limited, as the number of remaining story points stayed almost unchanged. A clearer reduction can be seen around June 8th, indicating that several tasks were completed or updated at the same time. Towards the end of the sprint, more progress was made, but the sprint still ended with remaining work. This shows that the team made progress, but task completion and Jira updates were not evenly distributed throughout the sprint. Sprint 14 is shown in Figure 28.

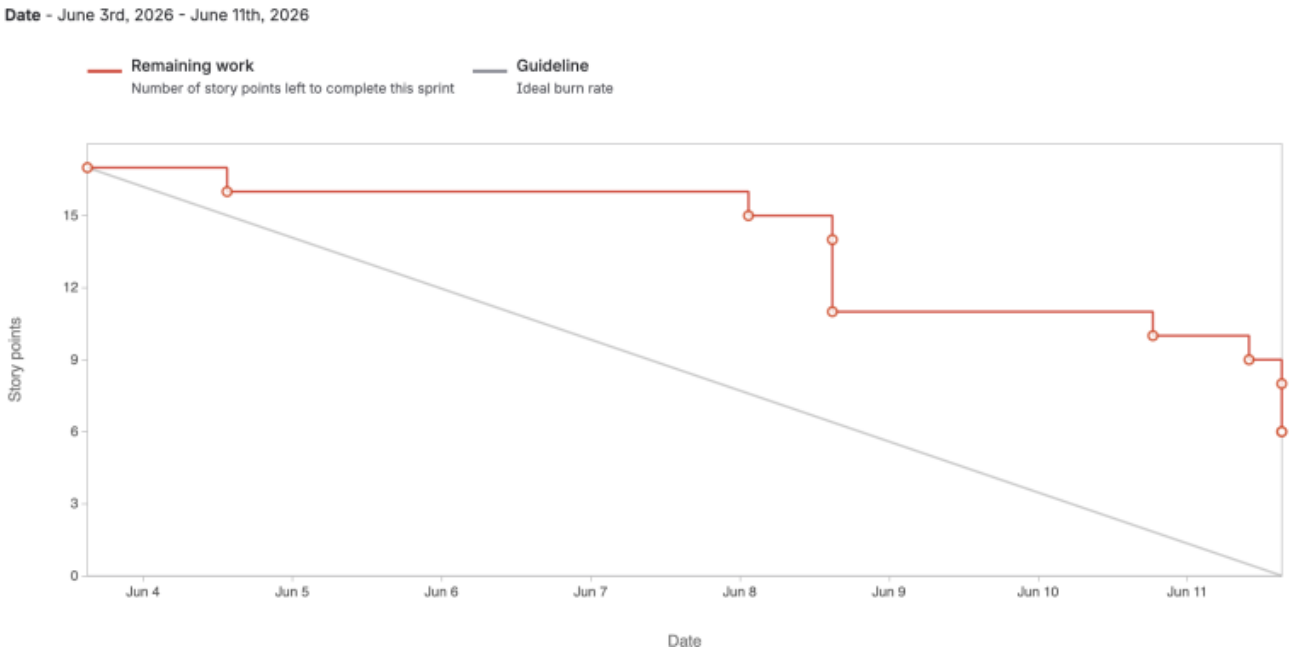

Figure 28: Week 14 burndown chart

3.13 Sprint Evaluations

Second week retrospective

Positive Aspects During this week, the team worked well together and showed good coordination in roles and responsibilities. The wiki and Jira were kept relatively updated, and the team made solid progress in research and design. There were also strong ideas developed for the project's features, structure, and overall concept, along with progress on the ethics work. Overall, the team showed improvement in both collaboration and organization.

Challenges During this week, the team faced several challenges. There was a lack of clear discussion about project expectations, which led to some uncertainty. Task division was not always effective, and deadlines were not used efficiently. The wiki and report structure were somewhat disorganized, with resources not properly organized or uploaded. Additionally, the team could have shown more initiative and been more critical of their work. Overall, better structure, clarity, and efficiency are needed moving forward.

Ideas for Improvement During this week, the team developed ideas to improve the project by focusing on one main "smartblock" with simpler supporting blocks. They also explored sustainable materials, clearer separation between prototype and final product, and ways to improve functionality, such as adding sensors and using 3D printing.

Actions for Next Week For the next week, the team should focus on finalizing the structure and deciding on the materials for the project. It is important to continue and complete the necessary research while also developing the product design. The team should create a few sketches and present them for feedback. Additionally, roles and tasks need to be clearly defined, and the wiki should be properly updated with sources and kept organized. Work on communication materials such as a flyer, key facts, and an elevator pitch should also be continued.

Third week retrospective

Positive Aspects During this week, the team made strong overall progress and showed improved organization. The wiki was well maintained, and Jira was used effectively to keep track of tasks. The product design became clearer, supported by good structural drawings and a successful cardboard model. There was also progress in marketing, and the team had good planning for the upcoming weeks. Overall, collaboration was strong, with everyone showing up on time and contributing to steady progress.

Challenges During this week, the team faced challenges due to missing components, which slowed progress and led to some waiting time. There were still uncertainties regarding materials, sensors, and electronics, and decisions about these were not finalized. Parts of the wiki were disorganized, and project management could have been more structured. Additionally, the team had not clearly defined a target customer and needed to improve consistency in updating and sharing progress.

Ideas for Improvement During this week, the team developed ideas to improve planning and analysis. This included visualizing the market analysis more clearly and creating a risk matrix to better understand potential challenges. The team also focused on preparing for the interim presentation in order to improve communication and confidence.

Actions for Next Week For the next week, the team should focus on deciding on materials and further developing the technical aspects, such as weight and water flow. Each member should take clear responsibility for specific parts of the project and break tasks into smaller subtasks if needed. The team should also create a plan for the upcoming period to stay organized and maintain steady progress.

Fourth Week Retrospective

Positive Aspects During this week, the team successfully delivered the scheduled presentations, and key project components were selected. This contributed to clarifying the technical direction of the project and ensured alignment among team members.

Challenges The communication presentation did not meet expectations. The content and delivery could have been better structured and more effectively communicated.

Ideas for Improvement No specific improvement ideas were identified during this period.

Actions for Next Week The team will focus on completing and submitting the interim report. Emphasis will be placed on ensuring that all required sections are finalized and meet the expected quality standards.

Fifth Week Retrospective

Positive Aspects The interim report was successfully completed and submitted, marking an important milestone in the project timeline.

Challenges The report was finalized later than planned, indicating inefficiencies in time management and task distribution. Ideally, the report should have been completed before the final deadline to allow time for review and refinement.

Ideas for Improvement No additional improvement ideas were identified during this week.

Actions for Next Week The team will begin preparing for the interim presentation, focusing on improving content clarity, structure, and delivery.

Sixth Week Retrospective

Positive Aspects The team made good progress in preparing for the interim presentation, demonstrating improved coordination and focus on communication aspects.

Challenges Some challenges were encountered during the week; however, they were not clearly identified or documented.

Ideas for Improvement Based on feedback from supervisors, the team identified the need to improve the visual identity of the project, particularly by incorporating marine elements such as fish into the flyer and branding materials.

Actions for Next Week The team will further develop the technical aspects of the smart system,

with a particular focus on evaluating alternative battery options and improving the design of the smart module. In addition, work will continue on creating a 3D model video of the product to support visualization and presentation.

Seventh Week Retrospective

Positive Aspects The team identified a more suitable battery for the project, and the wiki was further improved. In addition, a meeting was held with Manuel, the project supervisor, to discuss the project and develop a more concrete plan moving forward.

Challenges The team was not able to create the 3D video as planned.

Ideas for Improvement No specific improvement ideas were identified during this sprint.

Actions for Next Week The team will finalize the selection of sensors, continue improving the wiki, and complete the 3D video.

Eighth Week Retrospective

Positive Aspects The team conducted a meeting with a professor, which provided valuable clarification on how to approach the project. The list of components and materials was finalized, and the smartblock of the product was completed.

Challenges The team has not yet completed the 3D video and continues to face challenges in effectively distributing tasks among members.

Ideas for Improvement

Improved task allocation and clearer responsibility distribution should be implemented to ensure steady progress. In addition, intermediate deadlines may help avoid delays in deliverables such as the 3D video.

Actions for Next Week The team will prioritize completing the 3D video and establish a more structured task distribution plan to improve workflow efficiency.

Ninth Week Retrospective

Positive Aspects The team started working on the scientific paper and completed the renders of the 3D model.

Challenges Due to vacation, limited progress was made during the sprint.

Ideas for Improvement Future sprint planning should take vacation and reduced availability into account to ensure that the workload is realistic and achievable.

Actions for Next Week Next week, the team should focus on completing the leaflet and the packaging solution.

Tenth Week Retrospective

Positive Aspects Despite the shortened working week, several key deliverables were completed, including the leaflet, packaging solution, 3D model, and user manual.

Challenges The sprint did not begin as originally planned, which reduced the available time for completing the sprint tasks.

Ideas for Improvement Future sprints should start according to the planned schedule to ensure that tasks are distributed more evenly throughout the sprint period. It may also be useful to account for vacations or reduced availability when planning sprint goals.

Actions for Next Week Next week, the focus will be on refining the 3D model, starting the prototype, and completing the scientific paper.

Eleventh Week Retrospective

Positive Aspects During this week, the team made important progress by figuring out how to produce the 3D mould. The 3D video was also completed, and work began on both the testing phase and the prototype.

Challenges The main challenge was that not all prototype components had arrived or were available. This limited the team’s ability to continue with the full prototype assembly and testing as planned.

Ideas for Improvement No specific improvement ideas were identified during this sprint.

Actions for Next Week Next week, the team will focus on completing the scientific paper, starting the concrete part of the prototype, and carrying out all planned tests.

Twelfth Week Retrospective

Positive Aspects
During this week, the team made good progress. The smartlogger was successfully made to work, which was an important step for the prototype. The scientific paper is also close to being finished. In addition, both the poster and the user manual were completed.

Challenges
The main challenge this week was that the 3D print drawing needs to be changed. This means that some adjustments must be made before the 3D printed part can be produced or used in the final prototype.

Ideas for Improvement
No specific improvement ideas were identified during this sprint.

Actions for Next Week
Next week, the team will focus on completing the prototype and making sure all parts are ready and working as planned.

Thirteenth Week Retrospective

Positive Aspects
During this week, the team made good progress with the prototype, and the prototype is now working. The first part of the 3D printing was completed, which was an important step toward finishing the physical model. The team also received feedback on the user manual, which will help improve the final version.

Challenges
One challenge this week was the name change from Smartblock to Smartlogger, which required updates in the documentation and project material. In addition, the scientific paper is still not finished. The team is also waiting for the final part of the 3D mould before the prototype can be fully completed.

Ideas for Improvement No specific improvement ideas were identified during this sprint.

Actions for Next Week Next week, the team will focus on completing the concrete prototype and making sure all parts are working as planned. The team will also work on finishing the wiki and updating the remaining documentation.

Fourteenth Week Retrospective

Positive Aspects During this week, the team delivered the scientific paper, completed the 3D print mould, finalized the wiki, finished the video, and prepared the final presentation. These tasks were important steps toward completing the final project deliverables.

Challenges One challenge during this week was that the flowchart still needed to be finished. In addition, the team did not start the concrete part of the prototype as planned, which means this task must be prioritized next.

Ideas for Improvement No specific improvement ideas were identified during this sprint.

Actions for Next Week Next week, the team will focus on completing the concrete prototype and practicing the presentation. The team will also make sure that the remaining documentation and final corrections are completed before submission.

3.14 Summary

The project has been managed using an iterative and structured approach, allowing the team to balance technical challenges with continuous development. Through defined scope, milestone planning, and Agile methods, the team has made steady progress in both design and implementation. While some challenges remain, particularly related to decision-making and organization, the project is moving forward with a clearer direction and improved collaboration.

2026/02/16 21:07 · epsatisep · 0 Comments

4. Marketing Plan

This chapter outlines the comprehensive marketing framework for the project. It details the progression from the initial business idea and Business Model Canvas to the final strategic positioning. Furthermore, it details the various market analyzes conducted and concludes with the definition of the brand image.

4.1 Introduction

The marketing plan for Maris Habitats focuses on positioning the project as a modular reef infrastructure and environmental data solution within the blue economy. Rather than claiming immediate biological recovery, the project focuses on what it can directly provide: scalable Reef Blocks, removable Smart Modules, and long-term environmental data.

The Reef Blocks create a physical structure in the marine environment and can provide surfaces, cavities, and sheltered spaces that may support habitat formation over time. The Smartlogger collects environmental data from selected locations, helping customers understand site conditions and environmental changes around the reef.

This positioning is relevant for public institutions, coastal municipalities, research organizations, environmental NGOs, port authorities, aquaculture operators, and marine infrastructure companies. These customers may need reef infrastructure, environmental monitoring, or data-based support for restoration evaluation, sustainability reporting, research, or decision-making.

This chapter defines the market context, target customers, positioning, and marketing-mix strategy for Maris Habitats.

4.2 Business Idea Formulation

The business idea of Maris Habitats is based on the need for marine habitat restoration and long-term environmental monitoring. Coastal and offshore areas are increasingly affected by habitat degradation, pollution, overfishing, and climate-related pressures. At the same time, the blue economy is becoming more important, as it aims to use ocean resources for economic growth while preserving the health of marine ecosystems **[85]**.

Artificial reefs have already been used for habitat restoration, fishery enhancement, research, and coastal management. However, their effectiveness depends on suitable design, site selection, materials, and long-term monitoring **[86]**, **[87]**. This creates an opportunity for a solution that does not only provide a physical reef structure, but also supports environmental data collection.

Maris Habitats responds to this need by offering a modular Reef Block system with an optional Smart Module. The Reef Blocks provide scalable underwater infrastructure, while the Smartlogger collects environmental data from selected locations. The purpose of the data is to help customers understand site conditions and observe how the reef and surrounding marine environment change over time.

The paying customers are not individual consumers, but organizations that benefit from better

monitored marine environments. These may include public agencies, coastal municipalities, environmental NGOs, research institutions, port authorities, aquaculture operators, and marine infrastructure companies. For these customers, Maris Habitats can provide reef infrastructure and data-based support for restoration evaluation, sustainability reporting, research, and decision-making.

The business model can be developed in stages. First, small pilot projects can be used to test the structure, Smartlogger system, and data collection method. Second, customers can purchase Reef Blocks and optional Smart Modules depending on the scale and purpose of the project. Third, annual monitoring services can be offered, including battery replacement, sensor inspection, data collection, and environmental reports.

This approach allows Maris Habitats to move beyond a one-time product sale. The project can be positioned as a scalable marine restoration and monitoring service, where customers can start with a small installation and expand the system over time.

4.3 Business Model Canvas

In this section, the Business Model Canvas for Maris Habitats is presented. Figure 29 provides an overview of the main elements of the business model, including customer segments, value proposition, channels, customer relationships, revenue streams, key resources, key activities, key partners, and cost structure. Each section of the canvas is explained in more detail below.

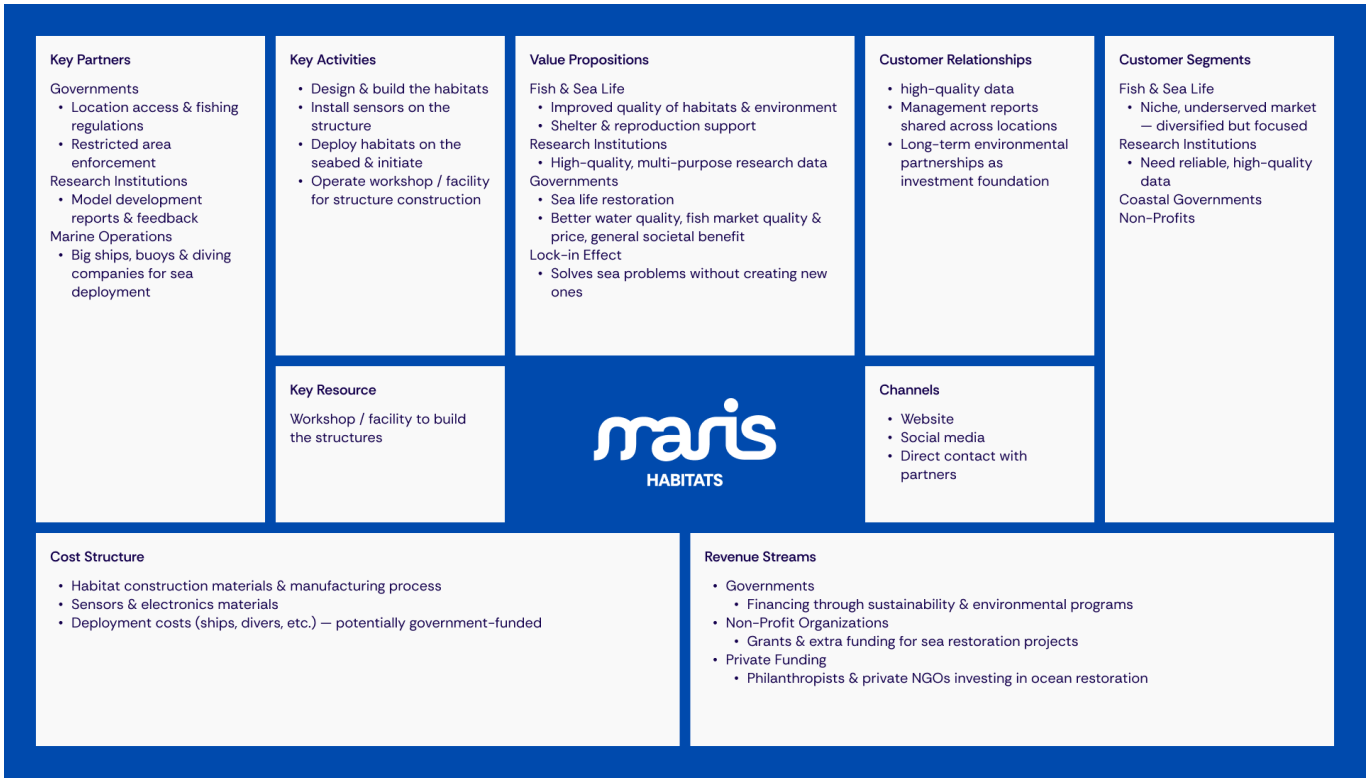

Figure 29: Business Model Canvas

1. Customer Segments

Maris Habitats is designed to support marine life, but the paying customers are organizations that manage, study, or protect marine environments. These include governments, coastal municipalities, non-profit organizations, environmental NGOs, research institutions, port authorities, aquaculture operators, and marine infrastructure companies.

The project also involves other stakeholders. Marine organisms are the main ecological beneficiaries, while society can benefit from healthier marine environments. Research institutions can also benefit from the collected environmental data, which can support studies, monitoring activities, and decision-making.

2. Value Proposition

Maris Habitats provides modular Reef Blocks that can create physical habitat structure in marine environments. These structures may provide shelter and support habitat formation over time. The project also offers an optional Smart Module for environmental monitoring. The Smartlogger collects data from selected locations, which can help research institutions and public organizations understand site conditions and environmental changes around the reef.

For governments and public institutions, the value of the project is connected to marine restoration, environmental monitoring, and sustainability goals. For research institutions, the main value is access to environmental data that can be used for analysis and long-term observation.

3. Channels

The primary focus is placed on reaching buyers through direct personal contact, while social awareness and transparency are established through a dedicated website and social media presence.

4. Customer Relationships

The project aims to keep unnecessary human disturbance in the marine habitat as low as possible. Since the Smartlogger stores data locally, maintenance and data retrieval can be planned as scheduled operations instead of continuous site disturbance.

For research institutions, Maris Habitats can provide collected data and reports to support analysis and cooperation between different locations. For governments and public institutions, the focus is on developing long-term environmental partnerships that support restoration and monitoring projects.

5. Revenue Streams

Funding is generated through the strategic alignment of the project with government and non-profit sustainability initiatives. By presenting the product as a vehicle for marine restoration and environmental monitoring, the project can attract institutional support. This approach can also extend to the private sector, where philanthropists and NGOs may support specific conservation milestones.

6. Key Resources

The main resource is the workspace, consisting of a facility with an initial area for research and computer-based tasks, and a second area dedicated to building models through concrete molds and structures, ranging from material modeling to sensor implementation and testing. If mass production of the Reef Blocks is required, a factory will be necessary to produce them sequentially and at a higher speed.

7. Key Activities

The scope of activities includes the design and construction of Reef Blocks, as well as the development and installation of the Smartlogger system. This is followed by the deployment of the Reef Blocks on the seabed and the initialization of the monitoring process. The management and analysis of the resulting data can be supported by research centers and institutions.

8. Key Partners

Governments are expected to act not only as clients but also as partners in determining site locations and establishing fishing regulations in those areas. The relationship with research institutions is mutually beneficial, as they are provided with data to analyze while offering feedback for the project. Furthermore, partnerships are sought with marine businesses, ship owners, and diving enterprises to assist with transportation and sea deployment.

9. Cost Structure

The total budget is divided among model construction, material and manufacturing costs, sensors, electronic components, and deployment expenses, including ships, delivery, and divers. In small-scale production, the team salary is also included. In the event of a transition to mass production, worker salaries and factory-related costs would also need to be considered.

4.4 Market Analysis

Marine ecosystem degradation is increasingly recognized as both an environmental and economic challenge. Coastal and offshore areas are affected by pressures such as climate change, pollution, overfishing, and habitat loss. These pressures can reduce habitat quality and create a need for restoration, monitoring, and better environmental decision-making **[88]**, **[89]**.

Artificial reefs have already been used in different parts of the world as tools for habitat support, fishery enhancement, research, and coastal management. However, their effectiveness depends on suitable site selection, structural design, material choice, and long-term observation **[90]**, **[91]**. Many existing reef solutions mainly function as physical structures and do not include environmental data collection as a core feature.

At the same time, public institutions, research organizations, environmental NGOs, port authorities, aquaculture operators, and marine infrastructure companies increasingly need measurable environmental information. This data can support restoration evaluation, sustainability reporting, research, and long-term site management.

This creates a market opportunity for a solution that combines modular reef infrastructure with practical environmental monitoring. Maris Habitats responds to this gap by offering Reef Blocks that can be installed alone or combined with an optional removable Smart Module. The Smartlogger collects data at scheduled intervals and stores it locally for later retrieval, instead of relying on real-time underwater communication.

The primary target market consists of institutional and organizational customers rather than individual consumers. These include national and regional authorities, coastal municipalities, research institutions, environmental NGOs, port authorities, aquaculture operators, and companies involved in marine or coastal infrastructure.

The most realistic market entry strategy is gradual validation. Small pilot projects can first be used to test the reef structure, Smartlogger system, maintenance process, and data retrieval method. After technical validation, the system could be expanded through public funding, research partnerships, environmental programs, or project-based services.

In this context, Maris Habitats is positioned as a modular reef infrastructure and environmental data

solution. Its market value comes from combining scalable Reef Blocks with optional monitoring services, allowing customers to start with a small installation and expand according to their budget, monitoring needs, and project goals.

4.4.1 PESTEL Analysis

A PESTEL analysis is a tool used by many businesses to study the general external environment before deciding on a business strategy. This environment is divided into political, economic, social, technological, environmental, and legal factors. The analysis helps identify changes in society and the market, allowing the business to adapt and position itself within this context.

4.4.1.1 Political

Politically, the current situation is favorable for projects related to marine restoration and environmental monitoring. The European Union (EU) has identified similar environmental challenges and has addressed them through the Nature Restoration Law (NRL), which requires member states to take corrective action toward ecosystem restoration **[92]**. As a result, demand for restoration-related solutions may increase, making the participation of public institutions and government agencies more likely.

4.4.1.2 Legal

Following the same policy direction, the United Nations (UN) has adopted the High Seas Treaty, also known as the Biodiversity Beyond National Jurisdiction (BBNJ) Agreement. This international agreement provides a legal framework for establishing Marine Protected Areas (MPAs) in international waters, emphasizing area-based management tools and environmental impact assessments in the deep sea **[93]**. These operations align with the business proposal and provide a structured framework that the project can follow.

4.4.1.3 Economic

Economically, marine restoration is moving from research-focused projects toward larger-scale implementation, and the funds and budgets allocated to these efforts are growing accordingly. In line with the previously mentioned regulations, substantial funding opportunities are available through different organizations:

- The EU, through the LIFE Program, can co-finance environmental and nature-related projects, including projects within nature and biodiversity calls **[94]**. Furthermore, under the specific mission “Restore our Ocean and Waters,” 2026 calls have been launched with an indicative budget exceeding € 115 M for topics including nature-based solutions and habitat mapping **[95]**.
- The Global Environment Facility (GEF) is also a relevant international funding mechanism for environmental projects. For the GEF-8 funding period, donor governments pledged USD 5.33 B to support global environmental challenges **[96]**.
- Lastly, at the national level, both Spain and Portugal, which are potential target locations, have initiatives related to fishing sustainability, marine restoration, and the blue economy. In Spain,

examples include the PLEAMAR and Empleaverde+ programs **[97]**, **[98]**. In Portugal, blue economy funding initiatives such as Fundo Azul and Portugal Blue can also support ocean-related innovation and sustainable marine development **[99]**.

4.4.1.4 Social

On a social level, several arguments gain momentum year after year. The restoration and creation of habitats have their primary impact on the creation of “shelter zones.” This allows for an increase in biomass, which can help stabilize the economy of fishing areas and reduce conflicts arising from resource scarcity. Furthermore, these habitats can indirectly support diving tourism by diverting tourist pressure from overexploited natural reefs toward controlled and managed areas, promoting a more sustainable blue economy.

In addition, the improvement of marine habitats can enhance water quality and help protect beaches from erosion. This can increase the overall quality of life in coastal cities, particularly in high-tourism regions such as the target countries, Spain and Portugal.

4.4.1.5 Technological

Technologically, the project is currently at its least mature point. There is an increasing need for environmental activities to be monitored, recorded, and measured in order to demonstrate their effectiveness and evaluate their results. Funding bodies, in particular, require reliable evidence from supported projects. For this reason, the project depends on a simple monitoring system that can meet these requirements without overcomplicating the process.

Other projects may involve 3D scanning of the implementation or restoration area for simulations, or high-resolution mapping using sonar. However, the project goals do not include these types of systems. Because of this technological gap, a simpler monitoring system is preferred to provide the necessary information without relying on excessive, highly invasive, or unnecessary testing.

4.4.1.6 Environmental

The implementation of marine habitats is subject to strict oversight by regulatory bodies under the EU Nature Restoration Law (NRL), which requires studies proving that the intervention will not negatively alter pre-existing environmental dynamics **[100]**. To this end, baseline characterization studies are conducted for later comparison after implementation.

Another study of great importance is ecological connectivity, which assesses interaction with the surrounding environment. This can support the creation of ecological corridors that facilitate species migration and climate change adaptation. Finally, other impact assessment and ecosystem service studies can support the project and help ensure its success.

Despite these well-defined tests and studies, this area may be challenging due to numerous regulatory requirements and limited professional experience in the field. Consequently, efforts will need to be made to satisfy both technical and social requirements.

4.4.2 SWOT Analysis

The main strengths, weaknesses, opportunities, and threats of Maris Habitats are summarized in Figure 30.

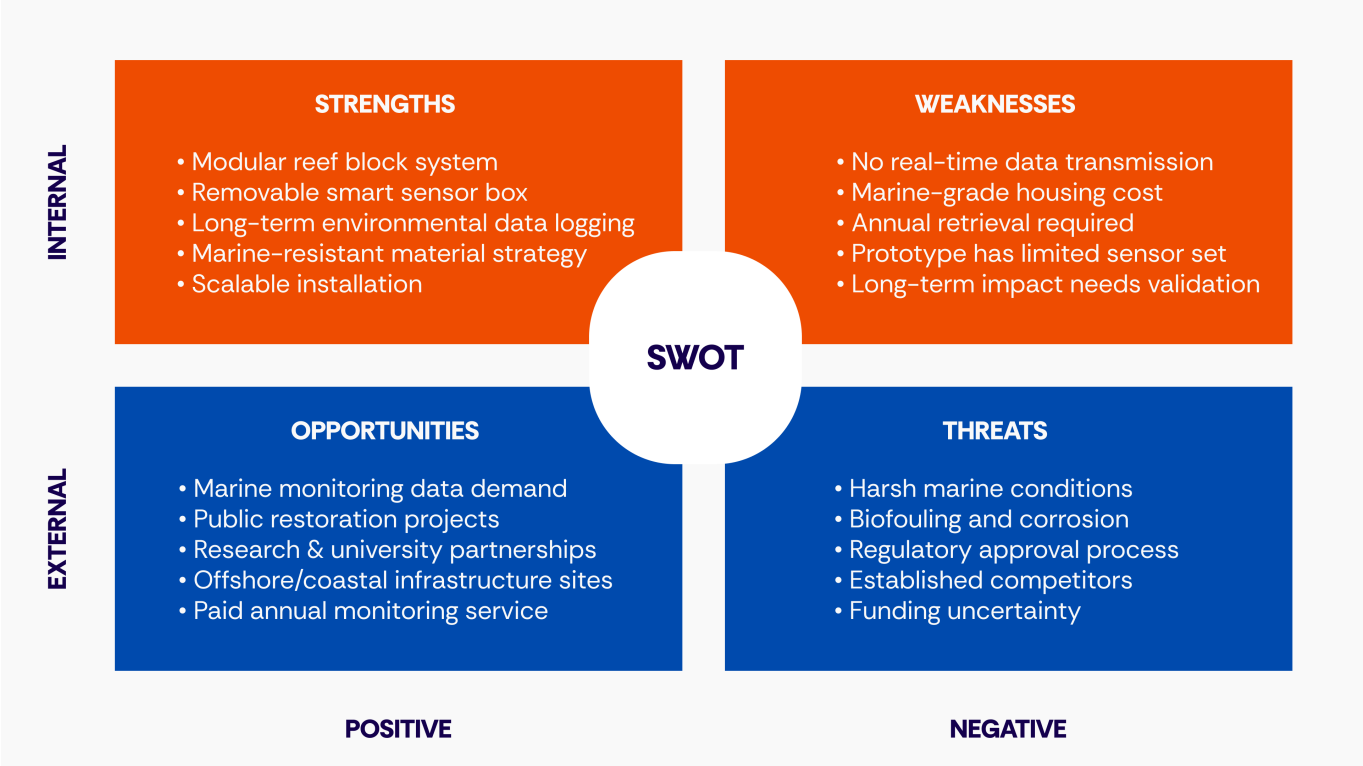

Figure 30: SWOT Analysis

4.4.2.1 Strengths

One of the main strengths of Maris Habitats is the combination of modular Reef Blocks and a removable Smart Module. The system is not only designed as a physical reef structure, but also as a tool for collecting environmental data around the reef over time.

Another strength is its modularity. Customers can start with a small number of Reef Blocks and later expand the system depending on the project size, budget, and monitoring needs. Since the Smartlogger can be removed from the Smartlogger attachment, maintenance, battery replacement, and data retrieval can be carried out without removing the whole Reef Block from the seabed.

The system also has value for long-term environmental observation. Instead of relying on real-time underwater communication, the Smartlogger stores data locally and allows the data to be retrieved during scheduled maintenance. This reduces technical complexity and power consumption while still supporting later analysis.

4.4.2.2 Weaknesses

A main weakness of Maris Habitats is the technical complexity of combining reef structures with sensors, batteries, waterproof housing, and data storage. Even though the system avoids real-time underwater transmission, the electronic components still need to operate reliably in harsh marine conditions.

Another weakness is the cost of marine-grade components. Pressure-resistant housings, underwater connectors, and durable sensors can be expensive, especially for the final product. The prototype uses lower-cost alternatives, but these are only suitable for controlled testing and cannot fully represent long-term marine deployment.

Maintenance is also a limitation. The system is designed for long-term local data logging, but the Smartlogger still needs to be retrieved periodically for battery replacement, sensor inspection, and data collection. This may require divers or technical partners, which can increase operational costs.

4.4.2.3 Opportunities

Maris Habitats can benefit from the growing demand for marine restoration, environmental monitoring, and data-based decision-making. Public institutions, coastal municipalities, research organizations, NGOs, port authorities, aquaculture operators, and offshore infrastructure companies may need solutions that combine reef infrastructure with environmental data collection.

There is also an opportunity to develop pilot projects with local authorities, universities, or marine infrastructure partners. These pilot projects could help test the modular Reef Blocks, the removable Smart Module, and the annual data retrieval process before larger-scale deployment.

Another opportunity is the development of a service-based model. In addition to selling Reef Blocks, Maris Habitats could offer annual monitoring services, including battery replacement, sensor inspection, data collection, and environmental reports. Basic datasets could also support research and education, while project-specific analysis could be offered as a paid service.

4.4.2.4 Threats

Several threats are related to the marine environment itself. Strong currents, storms, pressure, corrosion, and biofouling can affect the long-term performance of both the reef structure and the Smartlogger. These factors may increase maintenance needs, reduce data quality, or shorten the service life of some components.

Regulatory approval can also be a threat. Since the system is installed underwater and interacts with marine environments, deployment may require permits, environmental assessments, and cooperation with local authorities. This can delay implementation, especially for public restoration or coastal infrastructure projects.

Existing companies in marine infrastructure, reef restoration, and marine monitoring may also create competition. Some competitors may already have stronger market recognition, technical validation, or established partnerships with public institutions and coastal stakeholders.

Funding uncertainty is another threat. Many potential customers, such as public institutions, NGOs, and research organizations, may depend on project-based budgets, grants, or public funding. If funding is delayed or limited, customers may postpone installation or choose only a smaller pilot version.

4.5 Strategy

This chapter details the Maris Habitats marketing strategy, establishing clear objectives, market segmentation, and targeting. It defines the project's strategic positioning and concludes with a comprehensive marketing mix, analyzing the 4 Ps: Product, Price, Place, and Promotion.

4.5.1 Strategic Objectives

To determine the team's objectives, a SMART framework was used, ensuring that the goals are Specific, Measurable, Achievable, Relevant, and Time-bound. A 3- to 5-year horizon was defined to reduce ambiguity and support strategic alignment.

- Short-to-Medium Term: The primary objective is to demonstrate the system's feasibility through a functional prototype and establish strategic partnerships with research institutions, NGOs, and local authorities for pilot deployment.
- Long Term: Beyond the initial scope, the project aims to scale the solution into a modular and sustainable artificial reef system dedicated to marine ecosystem restoration and data-driven coastal management.

Monitoring, Metrics, and Baselines

The implementation of specific and measurable Key Performance Indicators (KPIs) will help guide the project. A longitudinal monitoring approach will be used by comparing post-deployment data with an environmental baseline, also referred to as the “Year 0” measurements. This comparative approach can help assess biodiversity changes, water quality improvement, and structural integrity over time **[101]**.

Critical Relevance in a Global Context

The relevance of these objectives is connected to the increasing pressure on marine ecosystems. Habitat degradation can affect marine biodiversity, ecosystem services, and communities that depend on the sea for food, tourism, and coastal protection. WWF also highlights that marine and coastal ecosystems in Europe face threats from habitat destruction, pollution, and climate change, which makes restoration planning more important **[102]**. For this reason, the strategy is not only a business goal, but also part of a wider response to marine ecosystem degradation.

Achievability and the “Experimental” Paradigm

In line with recent marine restoration guidance, this project can be considered experimental because it is still at an early validation stage and operates in a dynamic marine environment **[103]**. Unlike mature projects with predictable outcomes, this project still needs to test technical boundaries through prototypes, pilot deployment, and monitoring. Recognizing this experimental nature allows the team to maintain operational flexibility. Marine variables, such as current shifts, temperature fluctuations, and pH levels, require an adaptive management style, allowing the team to adjust its approach without compromising the core strategic objectives.

4.5.2 Segmentation and Targeting

Unlike traditional consumer products, this solution is not based on standard demographic or psychographic segmentation. Instead, it focuses on geographic and environmental conditions, especially coastal areas with similar marine characteristics.

At this stage, the main focus is on the Atlantic coast of Portugal and Northern Spain. These regions have similar ocean conditions and biodiversity, which makes it easier to apply the system without major design changes.

Although the European Union is the main institutional partner and initial market, the long-term goal is to expand to other regions with similar marine environments. Potential areas include the northeastern United States, southwestern Canada, western New Zealand, and central Chile.

In future developments, the system could also be adapted to different climates, including tropical and colder regions, allowing for wider global application.

From this perspective, the targeting strategy focuses on the main stakeholders within these regions. After identifying where the system can be implemented, it is important to define who benefits from it.

The project aims to support marine biodiversity, fish population growth, and better water quality. In addition, it may help reduce coastal erosion and protect coastal infrastructure by absorbing wave energy.

Unlike traditional solutions, the system also includes an optional Smart Module that collects environmental data at scheduled intervals. This supports data-driven decision-making for coastal management and long-term planning.

For these reasons, the main target audience includes national governments, regional authorities, and coastal municipalities. These stakeholders are responsible for environmental management and have the capacity to invest in long-term infrastructure.

The partnership strategy is based on three main criteria:

- Environmental awareness: recognition of marine ecosystem degradation
- Financial capacity: ability to support long-term investment
- Strategic alignment: consistency with sustainability policies

In this context, the EU Biodiversity Strategy for 2030 provides a strong framework because it aims to protect nature, reverse ecosystem degradation, and put biodiversity on a path to recovery by 2030. This makes Maris Habitats more aligned with European policy priorities for biodiversity and ecosystem restoration **[104]**.

4.5.3 Positioning

The positioning of Maris Habitats and selected existing companies is shown in Figure 31. The map is based on two criteria: ecological reef design on the horizontal axis and environmental data / monitoring capability on the vertical axis. These criteria were selected because Maris Habitats is intended not only to provide a physical reef structure, but also to collect environmental data around the reef over time.

Figure 31 shows that Maris Habitats is positioned between reef-based habitat solutions and marine data services, aiming to combine both ecological structure and environmental monitoring in one modular system.

The positioning map includes two types of existing solutions. ECOncrete, Reef Design Lab, IntelliReefs, and rrreefs are included as reef-related solutions, while XOCEAN is included as an example of a marine data company. XOCEAN provides turnkey ocean data services using uncrewed surface vessels, including seabed mapping and environmental monitoring. Therefore, it is positioned higher in environmental data / monitoring capability, but lower in ecological reef design because it does not focus on artificial reef or habitat structure development **[105]**.

ECOncrete, Reef Design Lab, IntelliReefs, and rrreefs are positioned on the right side of the map because their public product descriptions focus on ecological reef design, habitat creation, material innovation, or reef restoration. ECOncrete provides bio-enhancing concrete solutions for marine infrastructure **[106]**. Reef Design Lab designs, prototypes, and manufactures artificial reefs and coastal habitat infrastructure **[107]**. IntelliReefs develops Oceanite-based reef restoration substrates for marine restoration **[108]**. rrreefs rebuilds coral reefs using a 3D-printed modular system that supports biodiversity and habitat creation **[109]**.

However, compared with Maris Habitats, their public product descriptions do not clearly present a removable Smart Module as a core feature of the reef system. This does not mean that these companies do not collect any environmental data during projects. Rather, the map focuses on whether environmental monitoring is presented as an integrated product function.

Maris Habitats is positioned in the upper-right area of the map because it combines modular Reef Blocks with a removable Smart Module for environmental data collection. This position shows the intended niche of Maris Habitats between artificial reef infrastructure and marine environmental monitoring services.

Overall, the positioning map shows that Maris Habitats aims to combine ecological habitat support with environmental monitoring in one modular system. Unlike companies that focus mainly on reef structure or companies that focus mainly on data collection, Maris Habitats proposes a combined solution that can support both habitat creation and long-term observation.

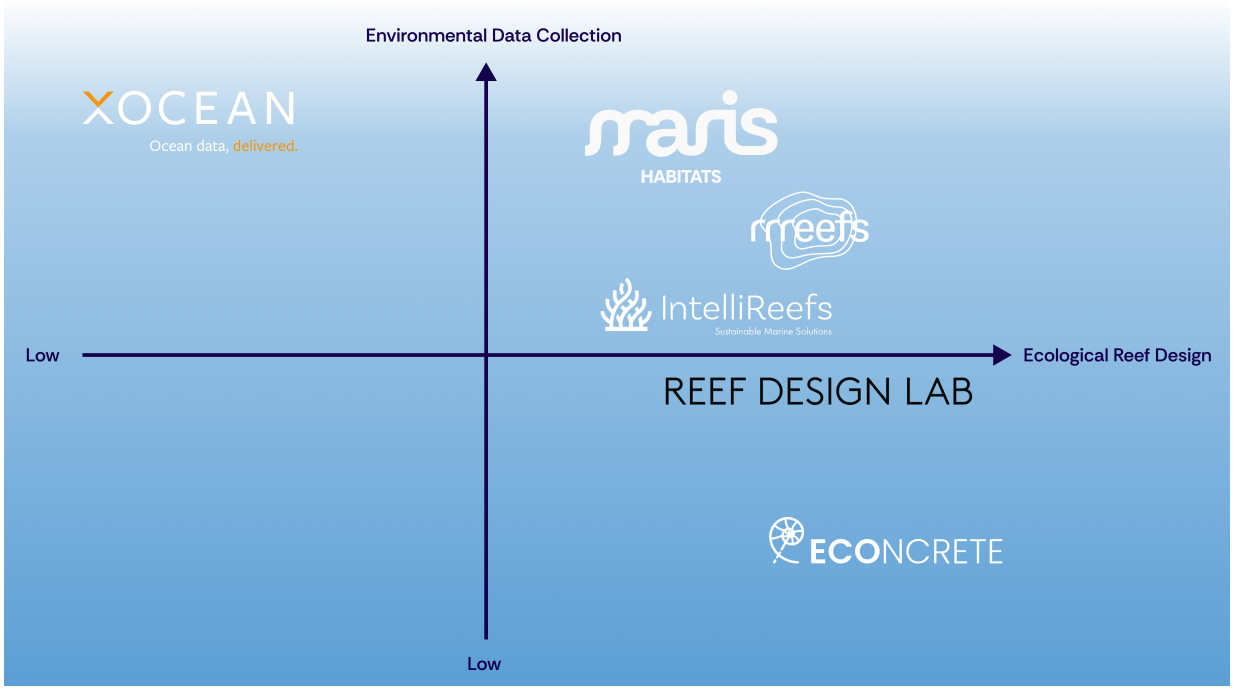

Figure 31: Positioning map of selected existing solutions and the proposed Maris Habitats system

4.5.4 Marketing-Mix

Product

Maris Habitats is a modular marine infrastructure and environmental monitoring system. The product consists of Reef Blocks, an optional removable Smart Module, and a monitoring service based on collected environmental data. The Reef Blocks are designed as modular underwater structures with textured surfaces and connection gaps between blocks, which may provide attachment areas and sheltered spaces for marine organisms over time **[110]**.

The Smartlogger collects environmental data such as temperature, pressure/depth, and selected water quality indicators from specific locations around the reef. The data is not intended to prove immediate ecological recovery. Instead, it is used to observe how the reef structure and surrounding marine conditions change over time, since artificial reef projects require long-term monitoring before ecological outcomes can be evaluated **[111]**.

The data-based monitoring service works by combining periodic data collection with maintenance and reporting. The Smartlogger records and stores environmental measurements during deployment. During maintenance visits, the data can be retrieved, checked, documented, and organized into simple reports for the customer **[112]**. These reports can help public institutions, researchers, or companies understand site conditions, compare changes over time, and plan future maintenance or restoration decisions. In this way, the service adds value to the physical reef structure by supporting long-term observation.

A key part of the product strategy is modularity. Customers can first install only the Reef Blocks and later add the Smart Module if monitoring is needed. This gives public institutions and companies more flexibility because they do not need to invest in the full system from the beginning.

The Smart Module is not included in every Reef Block. For larger installations, only selected Reef Blocks may include the Smart Module in order to collect representative environmental data while reducing the total system cost. The removable design also allows battery replacement, sensor inspection, maintenance, and data retrieval without removing the whole Reef Block from the seabed.

The final product could include different service levels. A basic version would include the Reef Blocks only. A standard version would include Reef Blocks and selected Smart Modules. A premium version could include yearly maintenance, data collection, sensor inspection, battery replacement, and environmental reports. In this way, Maris Habitats becomes more than a physical product; it becomes a modular platform for reef infrastructure, environmental monitoring, and data-based service.

Price

The pricing strategy for Maris Habitats follows a modular, scalable, and tiered pricing model. Since the system is composed of separate Reef Blocks and optional Smart Modules, the total price depends on the number of Reef Blocks, the number of Smart Modules, the selected sensor package, and the level of service required by the customer.

In the early market entry stage, Maris Habitats could apply a penetration pricing strategy through small pilot installations. Penetration pricing means setting a lower initial price for a new product or service to attract customers and gain market share at the beginning of the product life cycle **[113]**. In this project, the first installations could be offered at a lower introductory price to reduce the financial risk for customers and encourage adoption. After the product gains credibility, field data, and customer trust, the price could gradually move toward a standard market-based level.

The reef structure can be priced per Reef Block. This allows customers to start with a small pilot installation and expand the system later by adding more Reef Blocks. For larger restoration or monitoring areas, more Reef Blocks would be required, while smaller projects could begin with only a limited number of units. This makes the product more flexible for public institutions, research organizations, NGOs, and companies with different budgets.

The Smart Module would be offered as an optional add-on rather than being included in every Reef Block. For example, if a project installs 50 Reef Blocks, it may only need 5 Smart Modules placed in selected locations. These Smartloggers can collect representative environmental data from the site while reducing the total cost of the system. This is important because large installations do not need sensors in every single Reef Block.

A tiered pricing strategy could also be used for the Smart Module. Tiered pricing allows a product or service to be divided into different levels based on features, service scope, or usage, so customers can choose the option that best fits their needs and budget **[114]**. A basic package could include essential sensors such as temperature and pressure/depth sensors. A standard package could include additional water quality indicators such as conductivity or total dissolved solids. An advanced package could include more specialized sensors or customized monitoring options for projects with higher budgets or specific research needs.

In addition to the physical product, Maris Habitats could offer an annual monitoring service. This service could include data retrieval, battery replacement, sensor cleaning, sensor inspection, and an environmental report. The service could also be divided into different levels. For example, a basic service could include only data retrieval and inspection, while a premium service could include regular maintenance and a detailed environmental report.

Through this pricing model, customers can choose the level of product and service that fits their budget and project scale. At the same time, Maris Habitats can create a more stable business model by combining one-time product sales with recurring monitoring and maintenance services. This turns Maris Habitats from a simple artificial reef product into a scalable marine restoration and monitoring service.

Place

Because Maris Habitats is not a consumer product, it would not be distributed through normal retail channels. The product is intended for institutional and project-based customers, such as public authorities, coastal municipalities, port authorities, research institutions, environmental NGOs, aquaculture operators, and marine infrastructure companies.

The distribution strategy should therefore be based on direct sales, partnerships, and pilot projects. Instead of selling the product through shops, the team would approach potential customers directly and offer project-specific solutions depending on the site, budget, monitoring needs, and environmental goals.

At the first stage, the main geographical focus would be the Atlantic coast of Portugal and Northern Spain. These regions are suitable as an initial market because they are close to the project location and have comparable marine conditions. Starting in nearby regions also makes communication, testing, transport, installation, and maintenance easier.

After validation through pilot projects, Maris Habitats could be expanded to other coastal regions with similar marine environments. Possible future markets include other European coastal areas and international regions where artificial reef structures or environmental monitoring systems are needed. However, expansion to different climates or ecosystems would require additional testing and local adaptation.

The installation and maintenance process would likely require cooperation with local partners. These may include diving teams, marine contractors, port operators, research institutions, or environmental agencies. This partnership-based distribution model is important because underwater installation, annual data retrieval, and sensor maintenance require site access and technical support.

Promotion

The promotion strategy should focus on clear, realistic, and evidence-based communication. Since Maris Habitats is presented as an environmental solution, promotion must avoid exaggerated claims or greenwashing. The system should not be promoted as a complete solution that can fully restore marine ecosystems by itself. Instead, communication should explain what the system can realistically provide: modular reef infrastructure, optional environmental monitoring, and long-term local data collection.

The main promotional message should emphasize the difference between Maris Habitats and existing artificial reef solutions. Many existing systems focus mainly on reef structure or ecological design. Maris Habitats adds value by combining modular Reef Blocks with a removable Smart Module. The Smartlogger stores environmental data locally for later analysis.

Promotion should be targeted at professional and institutional audiences rather than the general consumer market. Suitable channels include direct presentations to public authorities, research institutions, port authorities, environmental NGOs, and marine infrastructure companies. Promotion could also include project reports, technical brochures, and presentations at conferences or events related to marine restoration, environmental monitoring, coastal infrastructure, and sustainability.

Digital communication can also support promotion. A website or project page can explain the system, show the modular structure, describe the Smartlogger, and present pilot project results when available. Social media can be used for awareness, but the content should remain informative and technical rather than overly promotional.

For early-stage promotion, pilot projects are especially important. Demonstrating the system in a controlled or small-scale marine environment would help build credibility. Data collected from pilot deployments could later be used in reports, presentations, and case studies to show how the system works and what kind of environmental information it can provide.

Overall, the promotion strategy should present Maris Habitats as a realistic and modular solution for marine infrastructure and environmental monitoring. The focus should be on transparency, technical feasibility, long-term observation, and collaboration with institutions that are already involved in marine restoration, research, or coastal management.

4.5.5 Brand

The name of the product is Maris Habitats.Maris is of Latin origin, meaning “of the sea”. This name was chosen to reflect the mission: to give back to the ocean and support the growth of new marine habitats.

Logo

The Maris logo (see Figure 32) is inspired by the movement of the ocean: fluid and continuous. It captures the essence of water through a single, uninterrupted line, symbolizing flow, connection, and natural rhythm.

Figure 32: Maris Habitats Logo

Color System

The Maris color palette (see Figure 33) is inspired by the depth and diversity of the ocean. It balances cool aquatic tones with a vibrant accent, reflecting both calmness and life beneath the surface.

- **Deep Sea Blue** — #14004D **Foundation color** Represents depth, mystery, and stability
- **Ocean Blue** — #004AAD **Core brand color** Clear, strong, and evoking open water
- **Fish Blue** — #5C9FD5 **Secondary tone** Adds lightness and movement
- **Sky Blue** — #DDEBF6 **Background color** Soft, breathable, and minimal
- **Coral Orange** — #EE4C01 **Accent color** Inspired by coral reefs, used for highlights, energy, and contrast
- **Orca White** — #F9F9F9 **Neutral base** Clean, modern, and versatile

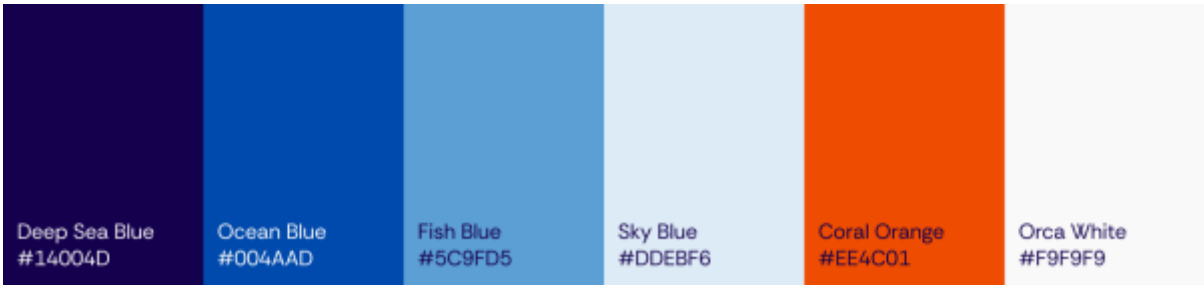

Figure 33: Maris Habitats Brand Colors

Graphic Elements

The graphic language (see Figure 34) of Maris is derived from marine ecosystems, translating organic underwater forms into bold, modern visuals. The organic shapes are inspired by coral, sea plants, and flowing water. Shapes are soft, rounded, and natural. The elements overlap to create depth,

mimicking underwater environments and ecosystems.

Figure 34: Maris Habitats Graphic Elements

4.6 Marketing Programs

4.6.1 Programs

To support the visibility and future development of Maris Habitats, the marketing programs are based on four main activities. These activities combine digital communication, institutional cooperation, public awareness, and prototype demonstration.

- Social Media & Digital Promotion: Digital communication will be used to present the project and explain its main purpose. Instagram can be used to share visual updates and short videos for students and the general public, while LinkedIn can be used for technical updates, project milestones, and professional networking. A project page on the university website can also include the project description, research goals, prototype progress, and basic data examples. The content should clearly show the Reef Block design, the Smartlogger, and the environmental monitoring concept.
- Collaboration with Universities and Marine Organizations: Collaboration with universities and marine organizations is important for feedback, technical support, and future validation. The main academic collaboration will be connected to the Instituto Superior de Engenharia do Porto (ISEP), where the team can receive multidisciplinary support. In the future, the project could also cooperate with marine research centers and local environmental organizations to improve the design and make it more suitable for real marine conditions.
- Educational & Awareness Activities: Educational activities can help explain the value of artificial reefs and environmental monitoring. The team can organize technical presentations or small workshops for engineering and environmental science students. Awareness activities can also be used to inform the local community about marine habitat restoration, biodiversity protection, and the role of artificial reefs in supporting marine ecosystems.
- Prototype Demonstration: The prototype demonstration will show the physical concept of Maris Habitats in a controlled environment. It can present the scaled Reef Block and the basic operation of the Smartlogger prototype. This allows stakeholders to see how the structure, sensor system, and data collection process work before any future marine deployment.

4.6.2 Budget

To keep the marketing activities realistic during the prototype and early dissemination stages, a small and practical budget is planned. The costs are kept low by using free digital platforms, university resources, and simple printed materials.

- Social media promotion: € 0–50. Mainly organic posts, with small targeted ads if needed.
- Posters & printing: € 30. Technical posters for presentations and institutional display.
- Presentation materials: € 50. Handouts, visual materials, and support media for workshops or meetings.
- Prototype exhibition: € 200. Transport, exhibition materials, small fixtures, and demonstration consumables.
- Website / digital tools: € 0–30. Use of university subdomains, free website tools, or open-source content management tools.

4.6.3 Control

To check whether the marketing programs are effective, simple control and feedback methods will be used. These methods will help the team understand which activities work well and what should be improved in future promotion and dissemination.

- Social Media Engagement Metrics: Digital communication results will be checked using the analytics tools available on each platform. The main metrics include likes, shares, comments, and overall reach. These results can be reviewed regularly to understand which content is more effective and how future posts can be improved.
- Feedback from Professors & Students: After workshops, presentations, or project demonstrations, feedback can be collected from professors, students, and other participants. Simple surveys or feedback forms can be used to evaluate whether the project explanation is clear, useful, and relevant. This feedback can help improve future presentations and educational activities.
- Prototype Evaluation: The prototype can be evaluated during exhibitions and demonstrations through observations and discussions with visitors, professors, and technical stakeholders. Feedback about the Reef Block design, Smartlogger system, waterproofing, sensor accuracy, and maintenance process can be used to improve the final product concept.

4.7 Summary

This chapter presented the marketing strategy for Maris Habitats. The analysis showed that the project should target institutional and project-based customers, such as public authorities, coastal municipalities, research institutions, environmental NGOs, port authorities, aquaculture operators, and marine infrastructure companies.

Based on this market analysis, the team decided to position Maris Habitats as a modular reef infrastructure and environmental monitoring solution. The product is intended for customers that need scalable reef structures, long-term environmental observation, and data-based support for restoration, research, or coastal management.

For this reason, the solution was designed with modular Reef Blocks, an optional removable Smart Module, local data logging, and service-based monitoring options. These features allow customers to start with a small pilot installation and expand the system according to their budget, site conditions, and monitoring needs.

The next chapter examines the sustainability of this solution by considering its environmental, economic, and social impacts, as well as its life cycle.

2026/02/16 21:08 · epsatisep · 0 Comments

5. Eco-efficiency Measures for Sustainability

This chapter presents the sustainability aspects of Maris Habitats by looking at environmental, economic, and social impacts. It also explains how the product's life cycle is considered from material selection and production to maintenance and end-of-life.

5.1 Introduction

This chapter examines the environmental, economic and social dimensions of the project, as well as the product's life cycle, in order to assess its overall sustainability. The aim is to highlight the considerations taken to minimize negative environmental impacts when introducing artificial structures into marine ecosystems.

Particular attention is given to ensuring that the solution does not further disrupt or degrade existing ocean environments. This includes evaluating how the design, material selection, and long-term use of the product can prevent pollution and reduce ecological harm. By adopting a life cycle perspective, the chapter also addresses how the product can be managed responsibly from production to end-of-life.

5.2 Environmental

This section considers the environmental impact of the project using principles inspired by the butterfly diagram, a model that represents circular material flows **[115]**. The model distinguishes between biological processes, where materials safely integrate into natural systems, and technical processes, where products are maintained, reused, and recycled to extend their lifespan (see Figure 35).

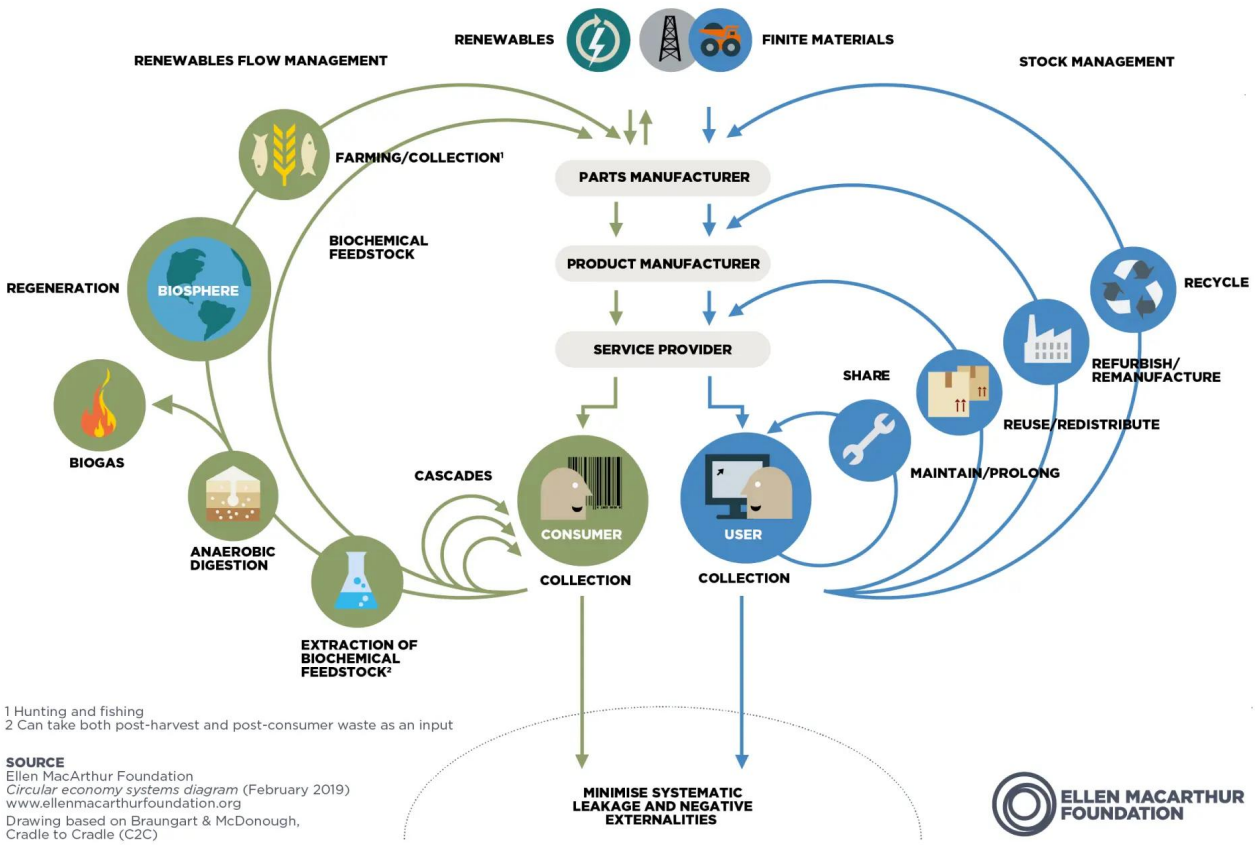

Figure 35: Butterfly diagram **[116]**

The Maris Habitats concept reflects these principles by combining long-term environmental integration with efficient use of technical components. From a biological perspective, the Reef Block is designed to support marine colonization over time. The use of non-toxic and durable materials allows algae, microorganisms, and small marine species to attach and grow on the structure, contributing to biodiversity enhancement **[117]**.

From a technical perspective, the system is designed with longevity and adaptability in mind. The Reef Block is intended to remain underwater for long periods, while the Smartlogger is designed as a removable waterproof housing for the monitoring components. The Smartlogger contains the battery, microcontroller, sensors, and data storage system, and it is held by the Smartlogger attachment on the Reef Block. Sensor probes remain exposed to seawater to measure environmental conditions such as pH, conductivity, pressure, and temperature. This modular design allows maintenance or replacement of electronic components without removing the whole Reef Block.

Maintenance requirements are reduced through the use of durable materials that can withstand harsh marine conditions. When maintenance is required, divers can retrieve the Smartlogger to collect stored data and replace batteries without disturbing the Reef Block. This reduces unnecessary material replacement and extends the operational life of the system.

The project also considers the reuse of technical components. If monitoring is no longer required, electronic components such as sensors, batteries, and storage devices can be removed and reused in future installations.

For the prototype, a cement-based casting method with a 3D-printed PLA mold may be used to reduce costs, while the final design uses basalt fiber-reinforced concrete to improve durability and corrosion resistance in marine environments. This approach reduces environmental impact while maintaining

long-term functionality.

5.3 Economic

The economic aspect of Maris Habitats is mainly related to the long-term benefits created through ecosystem restoration and its integration with existing marine infrastructure. By supporting marine biodiversity and fish population growth, the system may help increase fishery productivity over time. This can create economic benefits for coastal communities that depend on fishing as a source of income and food.

Previous studies have shown that artificial reefs can increase fish biomass and support the development of fisheries, which can lead to economic improvements in coastal areas **[118]**. In this project, this idea is applied through Reef Blocks that provide shelter and breeding areas for marine species.

The system is also designed to be integrated with existing marine infrastructure, such as offshore wind farms or coastal protection systems. This approach reduces the need for completely new structures and allows existing installations to gain additional ecological functions, improving resource efficiency.

The integration of the Smart Module adds another layer of economic value. The Smartlogger collects environmental data that can be used for research, monitoring, and decision-making. In this project, this data supports more efficient marine resource management and may help reduce costs related to ineffective environmental monitoring.

Another important aspect is the modular and scalable design of the system. Reef Blocks can be deployed gradually and adapted to different marine environments, reducing the need for large initial investments. This allows pilot projects to be tested before full-scale deployment.

The removable Smart Module also helps reduce maintenance costs. Instead of replacing or removing the entire Reef Block in case of failure, the Smartlogger can be inspected, repaired, or replaced separately. This improves operational efficiency and reduces long-term costs.

In addition, the project can benefit from collaboration with public institutions, research organizations, and environmental programs. Marine restoration and biodiversity protection are increasingly supported by sustainability policies and funding initiatives **[119]**. This creates opportunities for financial support through grants and public-private partnerships.

Although the initial investment may be relatively high, the project can create long-term value through ecosystem restoration, fishery support, and improved coastal protection **[120]**. For this reason, Maris Habitats can be considered both environmentally sustainable and economically viable in the long term.

5.4 Social

The integration of the Smart Module also creates social value by generating data that can be used by research institutions and environmental organizations for marine monitoring and scientific research. The Smartlogger can help improve understanding of marine ecosystems and support better

environmental decision-making.

The project is also aligned with the market strategy by focusing on partnerships with offshore wind farms, coastal authorities, research institutions, and environmental organizations **[121]**. By integrating Reef Blocks into existing marine infrastructure, the project promotes collaboration between technical and environmental stakeholders while reducing the need for additional construction.

In the long term, this approach can support sustainable fisheries, marine conservation efforts, and stronger cooperation between organizations involved in ocean management.

5.5 Life Cycle Analysis

The life cycle of the project is considered from material selection to end-of-life, with the aim of reducing environmental impact while maintaining long-term functionality.

In this project, the material phase focuses on choosing durable and environmentally responsible materials. The final design uses basalt fiber-reinforced concrete. Basalt fibers are made from natural volcanic rock and are known for their resistance to corrosion and chemical stability in seawater, which makes them suitable for marine environments **[122]**.

During the manufacturing phase, the Reef Block is produced through concrete casting, while the monitoring components are assembled separately inside the removable Smartlogger. The Smartlogger contains the battery, microcontroller, SD card, and sensors. Keeping the electronic components separate helps avoid embedding electronics directly into the permanent Reef Block and reduces unnecessary material waste.

The testing phase focuses on checking both the structural performance of the Reef Block and the operation of the Smartlogger system. Special attention is given to battery life, waterproof protection, sensor accuracy, and reliable data collection because these factors affect maintenance needs.

The Reef Block is also designed for long-term use in marine environments. Its geometry includes cavities and irregular surfaces that help algae, microorganisms, and small marine species attach to the structure over time.

To reduce environmental risks, the Smartlogger is designed as a removable unit that is not cast into the main Reef Block. It is mounted on the Smartlogger attachment and secured to the Reef Block with a chain. This keeps the Smartlogger connected to the reef structure and gives the diver a clear point to attach a hook or line. During maintenance, battery replacement, data collection, or repairs, only the Smartlogger needs to be removed, while the Reef Block stays in place. This also helps reduce the risk of long-term marine pollution from electronic components.

At the end of its life cycle, the Reef Block is intended to remain in the marine environment and continue functioning as an artificial reef that supports biodiversity **[123]**. Electronic components can be removed and reused in future systems, which helps reduce waste.

5.6 Summary

This chapter has examined the environmental, economic, and social dimensions of the project, together with a life cycle perspective, in order to evaluate its overall sustainability. The analysis highlights the importance of minimizing environmental impact while ensuring long-term functionality, economic viability, and social value.

Based on this sustainability analysis, the team selected a modular Reef Block design combined with a removable Smart Module and basalt fiber-reinforced concrete as the primary structural material. This choice is supported by its durability, resistance to marine conditions, and suitability for long-term deployment while reducing environmental risks. In addition, the separation of electronic components from the main Reef Block contributes to reducing pollution risks and improving resource efficiency.

Consequently, the solution was designed with features that support sustainability throughout its life cycle. These include a Reef Block that can integrate into the marine ecosystem over time, a removable Smartlogger that enables maintenance without disturbing the Reef Block, and a design that supports marine colonization through varied shapes and surface characteristics. Together, these elements help the system reduce negative environmental impacts while supporting marine biodiversity and long-term ecosystem health.

2026/02/16 21:09 · epsatisep · 0 Comments

6. Ethical and Deontological Concerns

This chapter presents the ethical principles and responsibilities considered during the development of Maris Habitats. It discusses engineering ethics, honest marketing, environmental protection, and liability related to the habitat structure and monitoring system

6.1 Introduction

This chapter outlines the ethical and deontological principles guiding the development of Maris Habitats, a smart artificial marine habitat designed to support marine life and collect environmental data. Since the project combines underwater structures, electronic components, and ecological restoration goals, ethical considerations must be included from the early design stage.

6.2 Engineering Ethics

Engineering ethics play an important role in the design and development of artificial marine habitats. According to professional engineering ethics, engineers should prioritize safety, public welfare, competence, and truthful communication **[124]**. In this project, these principles are applied not only to human users and installation personnel, but also to the marine environment affected by the system.

The Reef Block must be designed with sufficient strength, durability, and reliability to withstand marine conditions such as saltwater exposure, currents, wave forces, and long-term material degradation. Concrete and reinforced concrete exposed to marine environments can be affected by chloride ions, sulfate ions, magnesium ions, wave action, and corrosion processes **[125]**. Therefore, material choice and structural stability are not only technical issues, but also ethical responsibilities.

Engineers also have a responsibility to make sure that the Reef Block and the Smart Module do not create unnecessary risks for marine organisms, installation personnel, or the surrounding environment. The Reef Block should not damage the seabed or disturb existing ecosystems more than necessary. Instead, it should be designed to provide shelter, attachment surfaces, and spatial complexity that can support local marine life.

Another ethical consideration is the separation between the prototype and the final product. The current prototype is not intended for long-term deployment in deep marine conditions. It is designed to test the basic Reef Block concept, Smartlogger housing, sensing, and data logging. Presenting the prototype as a fully marine-grade final product would be misleading. Therefore, the team must clearly explain the technical limits of the prototype and identify what would need to be improved for real deployment.

Transparency is also part of responsible engineering practice. Environmental data collected by the Smartlogger should be accurate, calibrated when possible, and reported honestly. Even if the results do not show strong ecological improvement, the data should still be presented clearly because it can support future research and better decision-making in marine restoration.

6.3 Sales and Marketing Ethics

Sales and marketing ethics are important because Maris Habitats is presented as an environmental restoration and monitoring solution. The project should avoid greenwashing, which means making environmental claims that are exaggerated, misleading, or not supported by evidence **[126]**, **[127]**. The system should not be promoted as a complete solution that can fully restore marine ecosystems without long-term proof.

Instead, marketing communication should clearly explain what the system can realistically provide. Maris Habitats can support habitat creation, provide surfaces and cavities for marine organisms, and collect environmental data to observe how the Reef Blocks and surrounding conditions change over time. These functions should be communicated honestly to public institutions, companies, research organizations, and environmental partners. Marketing communication should also avoid broad environmental claims and instead explain specific and realistic benefits of the system **[128]**.

If monitoring data is offered as part of a service or subscription model, customers should be informed about what data is collected, how often it is collected, how it is stored, and what limitations the data may have. This is important because environmental data may influence restoration decisions, sustainability reports, or public communication. The data should not be used to make stronger claims than the system can support.

The duty of information transparency also means that customers should understand the difference between the basic Reef Blocks, the optional Smart Module, and additional monitoring services. Since the system is modular, not every Reef Block needs to include a Smart Module. This should be clearly explained so that customers can make informed decisions based on their budget, monitoring needs, and project goals.

6.4 Environmental Ethics

The project aims to support marine ecosystems while minimizing negative environmental impacts.

Artificial habitats can help provide shelter and settlement surfaces for marine organisms, but they can also create risks if they are poorly designed, placed in unsuitable locations, or made from inappropriate materials. For this reason, site selection, material safety, structural stability, and long-term monitoring must be considered before deployment **[129]**, **[130]**.

Material selection is a key environmental concern. The Reef Block should be made from durable, non-toxic, and environmentally compatible materials that do not release harmful substances into the marine environment **[131]**, **[132]**. Since the structure will remain underwater for a long period, the material must also resist degradation caused by seawater exposure, chemical attack, and physical forces **[133]**.

The surface texture and shape of the Reef Block should also be considered. Studies on ecologically enhanced marine concrete structures show that changes in surface complexity and material composition can influence species richness, live cover, and the balance between local and invasive species **[134]**. Therefore, the design should avoid overly smooth and simple surfaces. Instead, it should provide cavities, roughness, and sheltered areas that can support local marine organisms.

The project also considers the risk of biofouling on sensors. While marine growth on the Reef Block is desirable, growth directly on sensor surfaces may reduce data accuracy and affect long-term monitoring reliability **[135]**. For this reason, the Smartlogger should include protective design features, such as removable housing, sensor guards, or maintenance access. Antifouling solutions should be chosen carefully to avoid harming marine life.

In addition, Maris Habitats can contribute to environmental awareness and education by collecting data related to the surrounding marine conditions. This data can help researchers, public institutions, and local communities better understand how artificial reefs interact with their environment over time. However, the data should be interpreted carefully and should not be used to claim ecological success without long-term observation.

6.5 Liability

Liability relates to the responsibility for possible consequences if the system does not perform as intended. In deontological ethics, responsibility is connected to the duty to act carefully, prevent foreseeable harm, and remain accountable for the consequences of a design **[136]**. Since Maris Habitats includes both Reef Blocks and a removable Smart Module, liability covers structural, environmental, and data-related risks.

The main external stakeholders affected by these risks include public institutions, coastal municipalities, research institutions, environmental NGOs, port authorities, aquaculture operators, marine infrastructure companies, and the marine environment itself. Therefore, liability is not only related to product failure, but also to the possible impact on customers, data users, maintenance operators, local ecosystems, and future restoration or monitoring decisions.

In Maris Habitats, liability risks related to movement, instability, and possible damage to the seabed are addressed through the physical design of the Reef Blocks and the Smart Module. The Reef Blocks are made from basalt fiber-reinforced concrete. Basalt fiber-based materials are considered suitable for marine applications because of their mechanical performance and resistance to chemical and environmental degradation **[137]**. The material and estimated Reef Block weight are intended to improve the stability of the structure on the seabed. Each Reef Block is estimated to contain approximately 30 kg of concrete, giving the structure a high self-weight that helps reduce the risk of

displacement caused by currents or wave action. When several Reef Blocks are connected together, the total mass and contact area increase, making the overall habitat more resistant to movement under expected deployment conditions **[138]**.

The Smartlogger is designed as a removable monitoring box that can be attached to the Reef Block through the Smartlogger attachment without being permanently embedded in the concrete structure. This allows maintenance, battery replacement, and data retrieval without removing the main Reef Block from the seabed. To reduce the risk of the Smartlogger becoming loose or drifting away, it is mounted on the Smartlogger attachment and secured to the Reef Block with a chain or mechanical locking system. This keeps the Smartlogger connected to the Reef Block during operation while still allowing access for maintenance.

From a duty of care perspective, the project must also consider possible Smartlogger failure. If the box leaks, breaks, or records inaccurate data, the result may not only be a technical failure but also a problem for environmental interpretation. Incorrect temperature, pressure, pH, or water quality data could lead to wrong conclusions about Reef Block performance or local marine conditions. Since marine sensors can be affected by biofouling during long-term deployment, regular inspection, cleaning, calibration when possible, and data validation should be included before the data is used for reports or decision-making **[139]**.

The Smartlogger design helps reduce liability risks. Since the Smartlogger is separable from the Reef Block, electronic components can be removed, inspected, cleaned, repaired, or replaced without removing the whole Reef Block from the seabed. This reduces disturbance to marine life and lowers the risk of leaving failed electronic components in the sea.

Responsibility also includes the duty to consider long-term degradation. Although the Reef Block is designed to remain in the marine environment for a long period, the final design must consider what happens if materials wear down, break, or lose performance over time. Concrete structures in marine environments can deteriorate due to seawater exposure, chloride and sulfate attack, salt crystallization, corrosion processes, and physical forces such as wave action **[140]**. The system should therefore be designed and documented so that maintenance needs, operational limits, and responsibilities are clear.

Clear documentation and transparent data management are also important parts of liability. From a deontological perspective, this is related to the duty of transparency and accountability. The project should define how the system is installed, how often it needs to be inspected, who is responsible for maintenance, and how collected data should be stored and interpreted. For ocean data projects, data management planning is recommended to ensure that collected data is properly stored, preserved, and documented **[141]**.

These stability and maintenance measures should be described in the product development chapter and further validated through technical drawings, prototype tests, or simple stability calculations before real deployment.

6.6 Summary

This chapter has examined the ethical and deontological considerations associated with the development of Maris Habitats. The main concerns include environmental protection, structural safety, data integrity, transparent communication, and responsibility for long-term maintenance.

Based on this ethical and deontological analysis, the team chose a modular Reef Block design with a removable Smartlogger. This design allows the Reef Block to remain underwater while the electronic components can be removed for inspection, maintenance, or replacement. This reduces disturbance to the marine environment and lowers the risk of leaving failed electronic parts in the sea.

The team also decided to distinguish clearly between the prototype and the final product. The prototype is intended to validate basic sensing and data logging functions in a controlled environment. The final product would require marine-grade sensors, pressure-resistant Smartlogger housing, antifouling measures, and long-term field testing. This distinction is important to avoid misleading claims about the current technical readiness of the system.

From an environmental perspective, the solution prioritizes durable and compatible materials, structural stability, and surface features that support marine organisms. From a data ethics perspective, the system should collect and report environmental data honestly, including its limitations. These decisions help ensure that Maris Habitats is developed as a responsible marine restoration and monitoring solution rather than only as a physical product.

2026/02/16 21:10 · epsatisep · 0 Comments

7. Project Development

This chapter presents the development of Maris Habitats from concept to prototype. It briefly covers the design, structure, smart system, software, and testing process.

7.1 Introduction

Transitioning from a theoretical model to a functional underwater prototype involves a rigorous process of synthesis and troubleshooting. This chapter documents the technical execution of the project, detailing the mechanical assembly, electronic integration, and software architecture of the Maris Habitats system.

It serves as a technical log of the development lifecycle, highlighting how the theoretical foundations established in Chapter 2 were translated into physical components. From the challenges of ensuring watertight integrity for the sensor housing to the development of a reliable self-contained monitoring system with local data storage, this section provides a comprehensive look at the engineering challenges addressed during the fabrication and programming phases.

7.2 Ideation

The goal of this project is to design artificial marine habitats that can help endangered fish species and corals thrive again. Climate change and the warming of the oceans are disturbing marine ecosystems and damaging the natural balance of life underwater. Because of this, many species are losing safe places to live, hide, feed, and grow. The design is therefore focused on supporting nature itself, especially fish, corals, and other marine organisms.

The structure had to meet several important requirements. It had to be modular, so that different

units could be combined and adapted depending on the location and the needs of the ecosystem. It also had to be made from a material that would not harm the marine environment. Since corals need to grow on the structure, the material had to be suitable for marine life and preferably porous. At the same time, the habitat could not be excessively large or heavy, since this would complicate transport and installation. The design therefore had to balance practical deployment with sufficient weight and stability to remain in place and withstand sea currents.

To develop the concept, the team started with brainstorming sessions and research into similar existing projects. Different types of artificial reefs and marine restoration systems were researched, and also which materials could safely be used in the sea were studied. During this ideation phase, the creation of around six to seven different structural concepts was crucial. While the overall shapes of these concepts were quite similar, the main differences were in the materials and possible additional features such as sensors.

Several material options were explored, including basalt fabric-reinforced structures, polymer-clay, bacterial HSC, ECOncrete, recycled glass, and Biorock. Each material had its own advantages and disadvantages. Some were more expensive, while others were less suitable for coral growth or did not provide the level of porosity needed by marine organisms. Since fish and corals benefit from rough and porous surfaces, this became an important factor in the decision-making process.

After comparing the different options, basalt fabric-reinforced concrete was selected as the most suitable material for the project design. This material offered a strong balance between cost, weight, stability, and ecological suitability. It is not overly expensive, heavy enough to remain stable underwater, and easy to shape into modular forms. In addition, its porous surface makes it a good choice for encouraging coral growth and creating shelter for fish. The material can be formed by first making a mould in the desired shape and then placing the basalt fabric or mesh inside it. Depending on the required strength, the fabric can be arranged in one or several layers. Fine concrete or mortar is then poured, sprayed, or pressed around the reinforcement. After curing, the concrete becomes rigid while the basalt fabric remains embedded inside as reinforcement. For these reasons, basalt fabric-reinforced concrete was chosen as the best material for the final concept.

7.3 Concept

The final concept selected for Maris Habitats is a modular artificial marine habitat built from one repeated cone-shaped element, as shown in Figure 36. These modules can be connected side by side and stacked vertically, allowing the habitat to be expanded according to site conditions and ecological requirements. By using one repeated part, the system remains simple, scalable, and easy to reproduce, while still allowing a wide variety of structural arrangements.

Figure 36: Selected modular unit forming the basis of the final habitat structure.

The concept was selected because it provides a strong balance between ecological function and practical feasibility. Different configurations of the same module can create both smaller and larger shelter spaces, making the habitat suitable for a wide range of marine species. This adaptability is one of the main strengths of the concept, since different deployment sites may require different structural densities and sizes.

Another important aspect of the concept is the material choice. The habitat is intended to be made from basalt fabric-reinforced concrete, which combines structural weight and durability with a rough and porous surface suitable for marine colonization. This surface can support the attachment and growth of algae, corals, and other marine organisms, while the weight of the material helps the structure remain stable under underwater currents.

Compared to other design directions explored during the project, this concept proved to be the most suitable. Earlier ideas such as spherical, hexagonal, and dome-based structures (shown in Figure 37) were less effective because they were either not modular enough or too difficult to manufacture and combine efficiently. For this reason, the cone-based modular concept was defined as the final structural direction of the project.

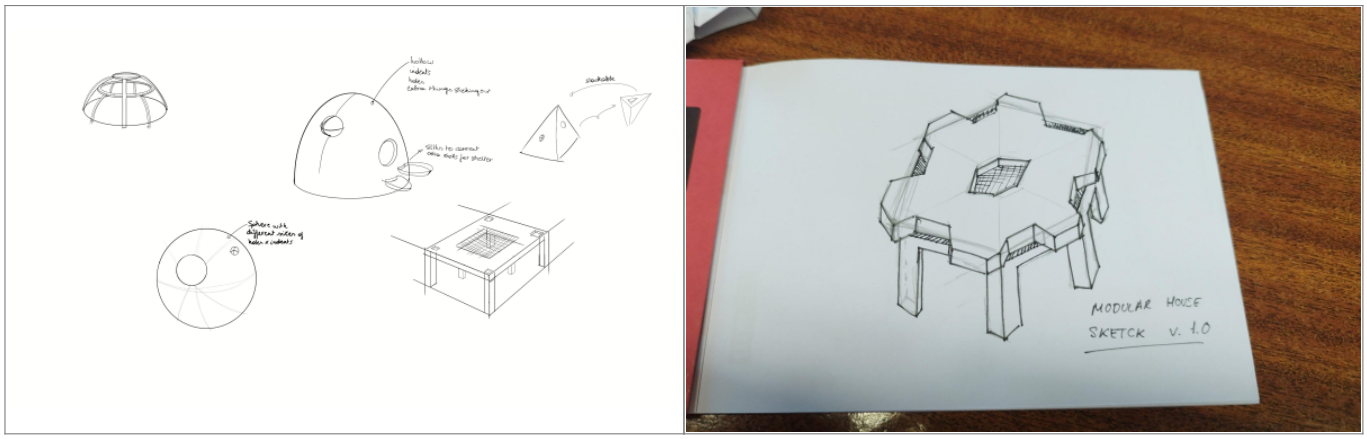

Figure 37: Drawings earlier ideas

7.4 Design

7.4.1 Introduction

This section presents how the selected concept was developed into a feasible structural solution for underwater deployment. The design process focused on translating the general concept into a habitat that is modular, manufacturable, stable, and ecologically suitable for marine colonization. The following subsections explain the main design decisions and the structural directions explored during the development process.

7.4.2 Design

The design phase focused on transforming the selected concept into a structure that could function in an underwater environment while remaining feasible to produce and deploy. From the beginning, the most important design requirement was modularity. The habitat had to be based on one repeatable element that could be combined in multiple ways without becoming too complex to manufacture or assemble. This requirement guided the entire design process and strongly influenced the selection of the final form.

Several structural directions were explored during this phase, including spherical, hexagonal, and dome-like concepts. Although these ideas offered interesting spatial qualities, they were gradually rejected because they did not satisfy the design goals strongly enough. Some concepts were too difficult to produce in a simple and repeatable way, while others did not provide the level of modularity needed to expand the habitat efficiently. In contrast, the cone-based element provided a clearer and more practical solution. Because the same unit can be repeated throughout the structure, the habitat can grow both horizontally and vertically while maintaining a simple and consistent construction logic.

The chosen design also supports ecological performance. By connecting and stacking the modules in different arrangements, the habitat can generate openings and sheltered spaces of different sizes. This is important because smaller and larger marine organisms require different types of refuge. The repeated units also create a more complex three-dimensional environment, which improves habitat quality and increases the suitability of the structure for fish, algae, corals, and other marine species.

Material selection was another important part of the design phase. The final design is based on basalt fabric-reinforced concrete, chosen for its combination of strength, weight, and ecological suitability. The material is heavy enough to improve stability under underwater currents, while its rough and porous surface can encourage biological growth over time. In this way, the design responds not only to structural and manufacturing requirements, but also to the biological purpose of the habitat.

Overall, the design phase transformed the initial concept into a clear and buildable solution. Instead of developing a complex habitat composed of many different parts, the design process focused on a single repeated module capable of generating a wide range of spatial configurations. This decision improved the scalability, manufacturability, and ecological potential of the habitat, and formed the basis for the structural development presented in the following subsection.

7.4.3 Structure

The structural development of the habitat began with a series of exploratory concepts. These early ideas were useful for identifying the design characteristics that were most important for the project, such as modularity, ease of production, structural repetition, and the creation of different shelter sizes. The figures below illustrate the main structural directions considered during this process. Figure 38 shows an initial idea.

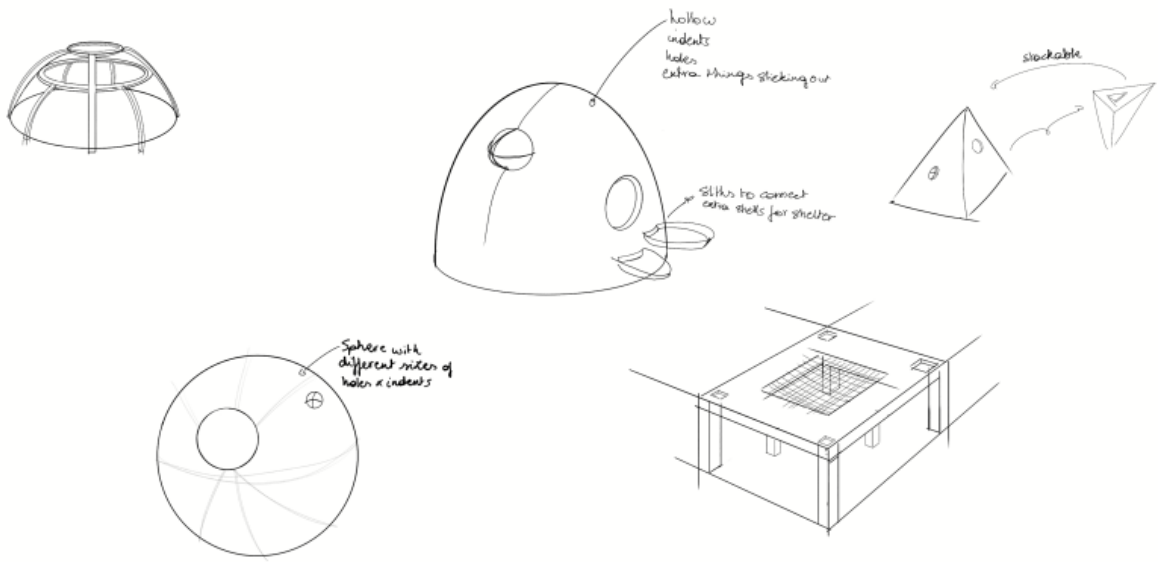

Figure 38: Early structural concept exploring enclosed shelter geometry.

One of the first directions explored was a more enclosed structure, shown in the early sketch above. This concept helped define the importance of shelter, internal space, and protection for marine species. However, although it offered enclosed refuge areas, it was not considered the most suitable direction because it did not provide the same level of modular flexibility as later concepts. As the design process continued, greater importance was given to repeatability and scalability.

Figure 39 illustrates the proposed habitat modular design.

Figure 39: Hexagonal modular concept explored during the structural development (AI generated render).

A second concept was based on a hexagonal module supported by pillars. This idea introduced a stronger modular logic and allowed several units to be connected into a larger structure. The concept was relevant because it explored how repeated modules could create a more adaptable habitat system. It also supported the study of elevated structures and the possibility of generating openings of different sizes. However, this direction was not selected as the final solution because the cone-based concept provided a simpler repeated form and clearer scalability (see Figure 40).

Figure 40: Structural variation exploring different opening sizes and configurations.

Further structural exploration focused on varying the dimensions and arrangement of the elements in order to create openings suitable for different marine species. This stage was important because it highlighted the ecological value of structural diversity. By studying how repeated parts could generate different internal spaces, the development process produced a clearer understanding of how geometry could influence habitat quality. These studies confirmed that the final design should allow variation in shelter size while still remaining based on one simple repeated part (See Figure 36 and Figure 41).

Figure 41: Selected modular unit forming the basis of the final habitat structure (AI generated).

After comparing the different structural directions, a concept based on one repeated cone-shaped module was selected. This solution was considered the most appropriate because it combines modularity, manufacturability, and ecological functionality. The same unit can be repeated many times, allowing the structure to expand horizontally and vertically while maintaining a simple construction logic. As illustrated in Figure 42, the arrangement of these modules creates a more complex habitat geometry with multiple shelter opportunities for marine organisms.

Figure 42: Example of the habitat formed by combining multiple modular elements (right picture is AI generated).

When several modules are combined, the habitat can cover a larger area of the seabed and create a more complex three-dimensional structure. This makes the system adaptable to different sites and allows the scale of the habitat to be adjusted according to the intended application. For this reason, the final structure is not defined by a single fixed form, but by a repeatable modular logic that can be expanded according to ecological and practical needs.

After defining the final modular structure, a suitable method still had to be developed for inserting the smartlogger. The development process of this solution is explained below.

Design Process of Sensor Structure

Below you can see the first version of the smart block, in which the smartlogger was attached to the bottom of the modular structure. However, this solution was not aesthetically pleasing, so a new approach was explored in which the smartlogger could be integrated into the modular structure itself. It was also important to avoid changing the structure too much, since that would require separate moulds for these specific blocks, even though they would be produced in much smaller quantities than the standard blocks.

The first design iteration is shown in Figure 43, with a detailed view provided in Figure 44.

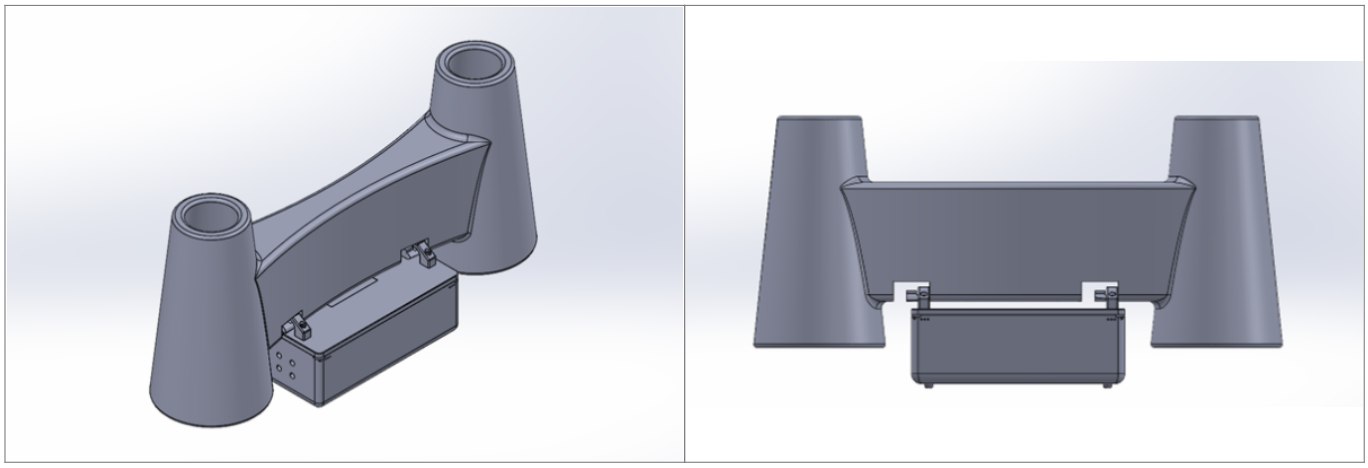

Figure 43: First variation of the smartblock

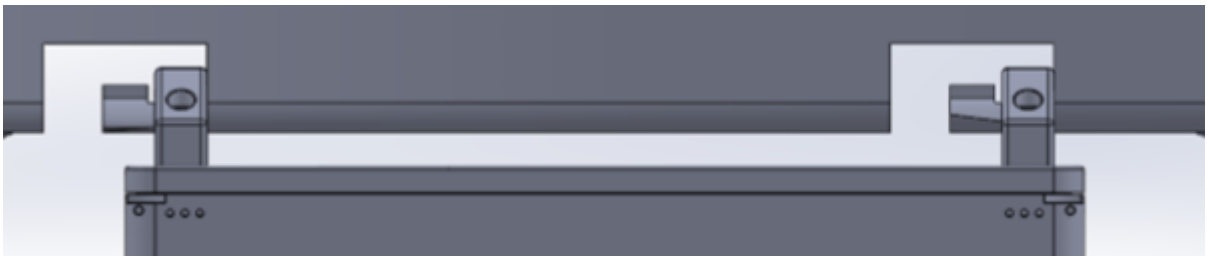

Figure 44: First variation of the smartblock (closeup)

In the second variation of the smart block, the smartlogger was much more integrated into the structure. However, this version required many modifications to the standard block. Additional openings also had to be added to ensure that the sensors had sufficient exposure to the surrounding water. This made the solution inefficient and impractical. As a result, another approach was explored, with a stronger focus on modularity so that a completely new mould would not be required.

Consequently, an alternative solution was explored, with a stronger emphasis on modularity to avoid the need for a completely new mould. The second variation of the design is illustrated in Figure 45, while a front view highlighting the structural modifications is shown in Figure 46.

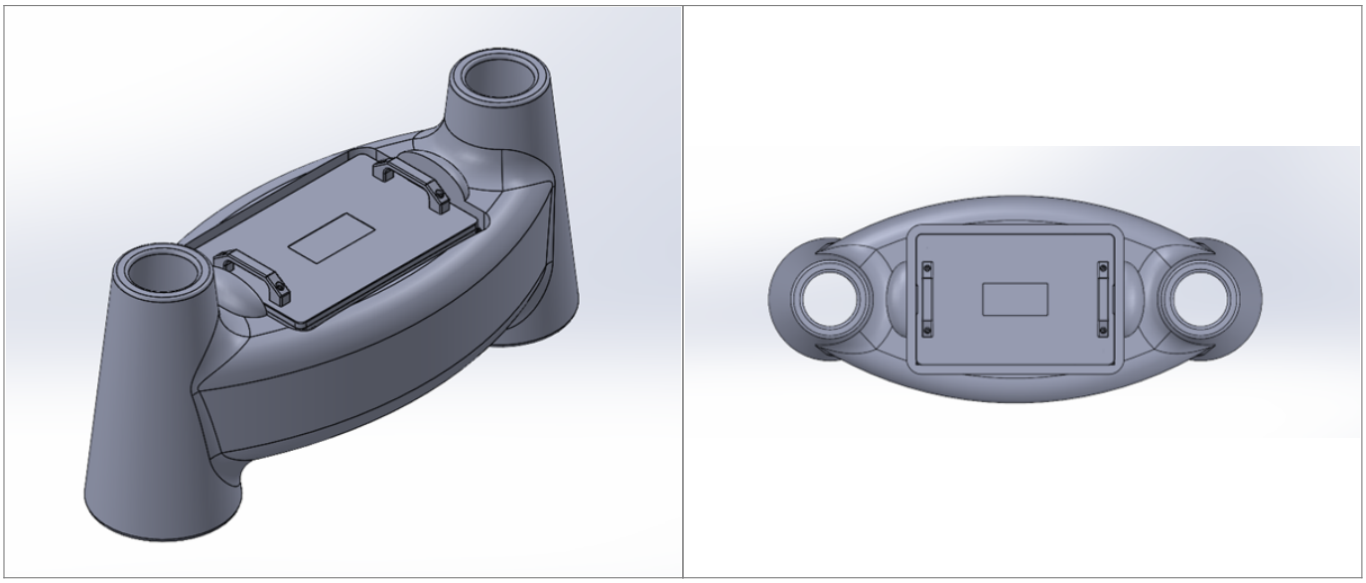

Figure 45: Second variation of the smartblock.

Figure 46: Second variation of the smartblock front and render.

This led to the development of a modular sensor solution. The supporting structure is constructed from titanium alloy TC 4 and can be installed in any reef block as required. Its design allows for easy placement and removal, since the space provided for the smartlogger is slightly larger than the smartlogger itself. This extra clearance makes insertion and extraction easier during maintenance or replacement. In addition, the block intended to contain the smartlogger has a distinct shape compared to the standard blocks, making it easy to identify within the overall habitat structure. The sensor housing is positioned on two supporting tubes and secured with a chain attached to the host block, ensuring stability during operation (see Figure 47 and Figure 48).

To facilitate maintenance, a distinct block design is used for the sensor unit. Over time, biological growth such as algae is expected to accumulate on the reef structures, reducing visibility and making it difficult to distinguish individual components. By incorporating a visually and structurally identifiable block, the sensor unit can be reliably located and accessed, even after prolonged submersion.

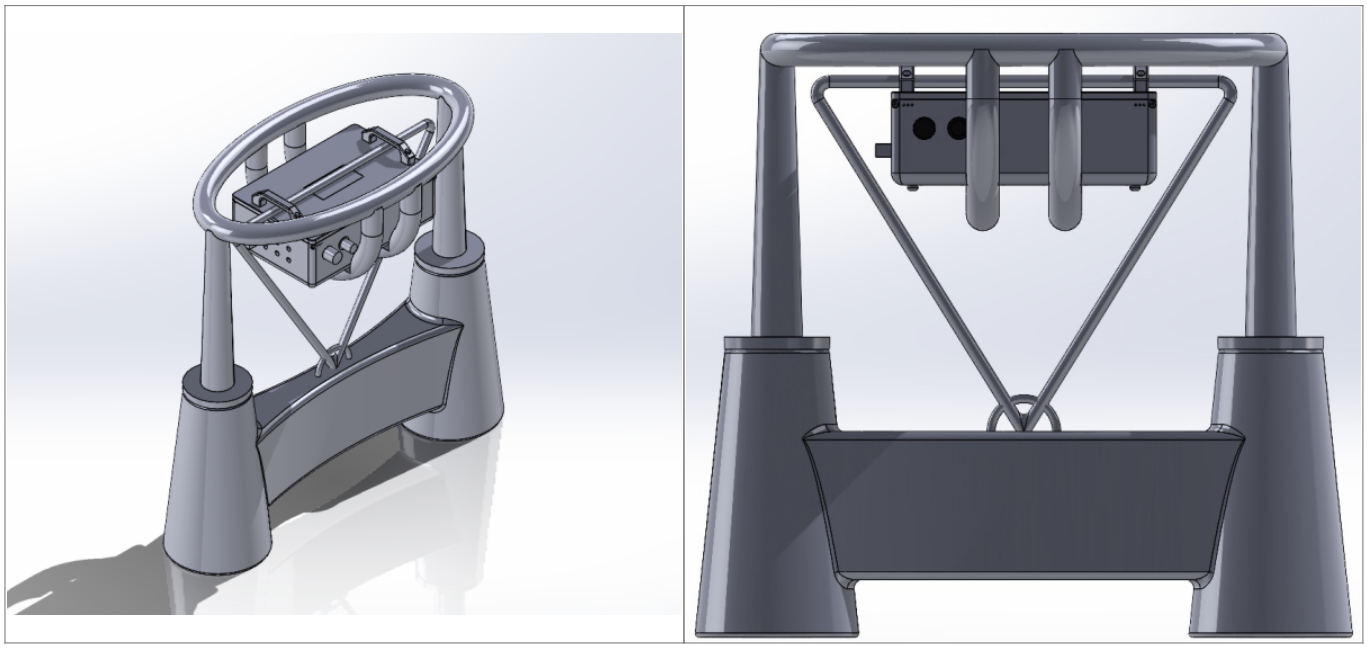

Figure 47: Final Smart Module assembly.

Figure 48: Final Smart Module.

In Figure 49 you can see the technical drawings of the Reef Block and the Smartlogger attachment.

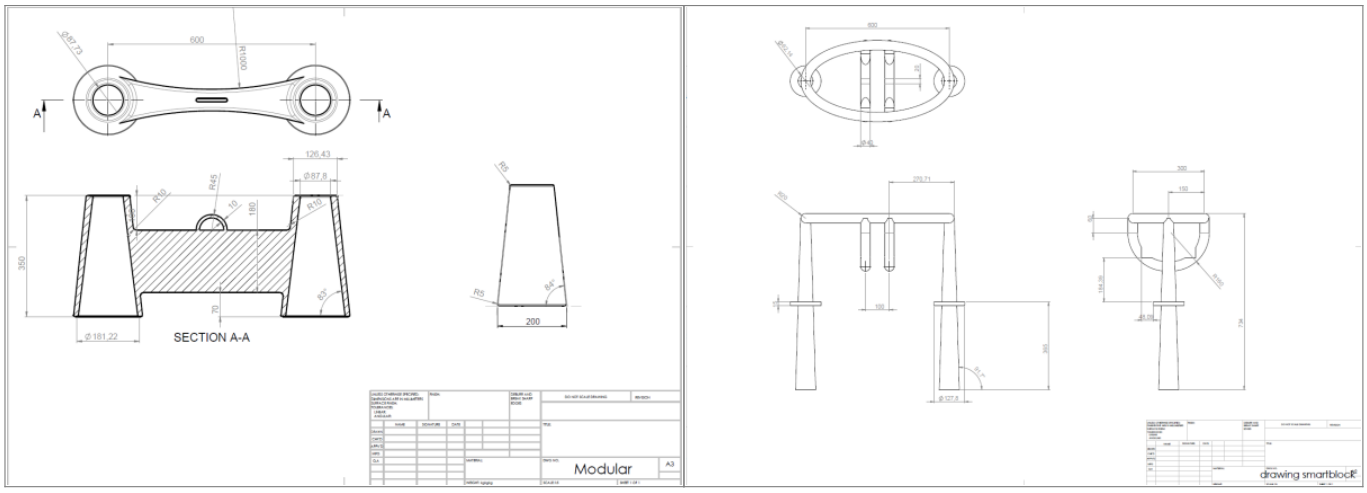

Figure 49: Structural drawings

To protect the smartlogger a roof is designed, this reduces the accumulation of debris on top of the smartlogger. In Figure 50 you see the roof attached to the Smartlogger.

Figure 50: Roof

Stress analysis of the structure

Introduction

For the structural simulations, basalt fabric reinforced concrete was used as the material definition. This material was chosen because the structure is intended to be placed underwater and therefore needs to resist external water pressure while remaining strong, durable and relatively stiff. To define the material in SOLIDWORKS, several mechanical and thermal properties were entered. The most important values are an elastic modulus of 3.6×10^{10} N/m², a Poisson's ratio of 0.20, a density of 2400 kg/m³, a tensile strength of 6.0×10^{6} N/m², and a compressive strength of 5.5×10^{7} N/m². These values are close to the expected behavior of a concrete-based material: the material is relatively stiff, has a high resistance to compression, but is much weaker in tension. This is important because concrete does not behave like a metal. It does not really "yield" plastically, but it is more

likely to crack when the tensile stress becomes too high or crush when the compressive stress becomes too high. Therefore, the entered yield strength of 6.0×10^6 N/m² should only be seen as an approximate reference value, mainly because SOLIDWORKS requires a yield strength for certain safety factor calculations. For this reason, the von Mises stress and standard factor of safety are not the most suitable failure criteria for this material. Instead, the first principal stress is used to evaluate tensile cracking, while the third principal stress is used to evaluate compressive failure. The simulation process was carried out in two stages. First, one separate module was analyzed to understand the basic behavior of a single part under underwater pressure and gravity. This helped to identify the main stress concentrations, displacement pattern and general stiffness of the geometry. Afterwards, a larger assembly of multiple connected modules was simulated to evaluate how the complete structure behaves when the load is distributed over the full system. The goal of these simulations is to check whether the stresses remain below the assumed tensile and compressive strength of the material, and whether the displacement and strain stay limited. Ideally, the results should show low deformation, acceptable principal stresses and no critical compression or tensile cracking zones. Special attention is given to the connections between the vertical supports and the beams, because these areas are expected to create the highest local stress concentrations.

Stress test concrete block

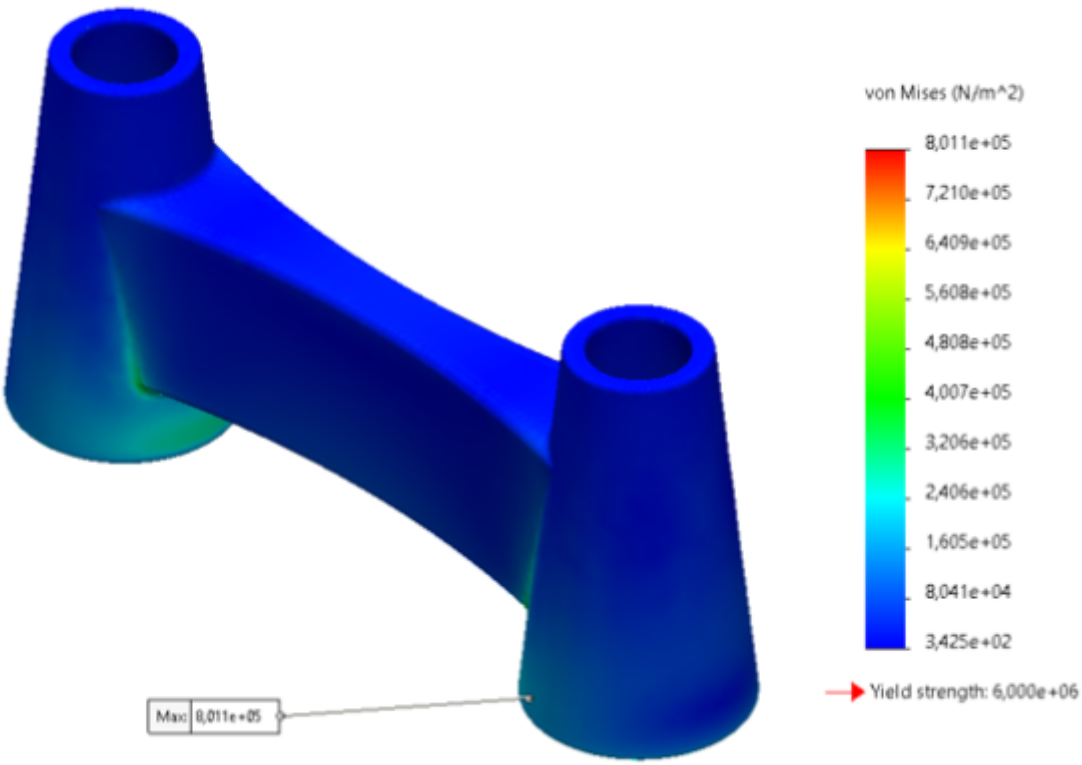

Figure 51: Simulation concrete block stress test.

The simulation (see Figure 51)indicates that the basalt fabric reinforced concrete structure can withstand the applied underwater load case. With an external water pressure of approximately 300,128 N/m² on all sides and gravity included, the maximum von Mises stress is about 0.801 MPa, which is significantly lower than the assumed yield strength of 6.0 MPa. This gives an estimated factor of safety of approximately 7.5, meaning the structure remains well within the safe range. The highest stresses occur near the connection between the cone-shaped supports and the central beam, which is expected because these areas act as stress concentrations. However, the stresses remain below the material limit, so the design appears structurally safe for this simplified underwater pressure load

case. Keep in mind that for concrete-based materials, it is also useful to check the maximum principal tensile stress, because cracking usually starts due to tensile stresses rather than yielding.

Displacement test concrete block

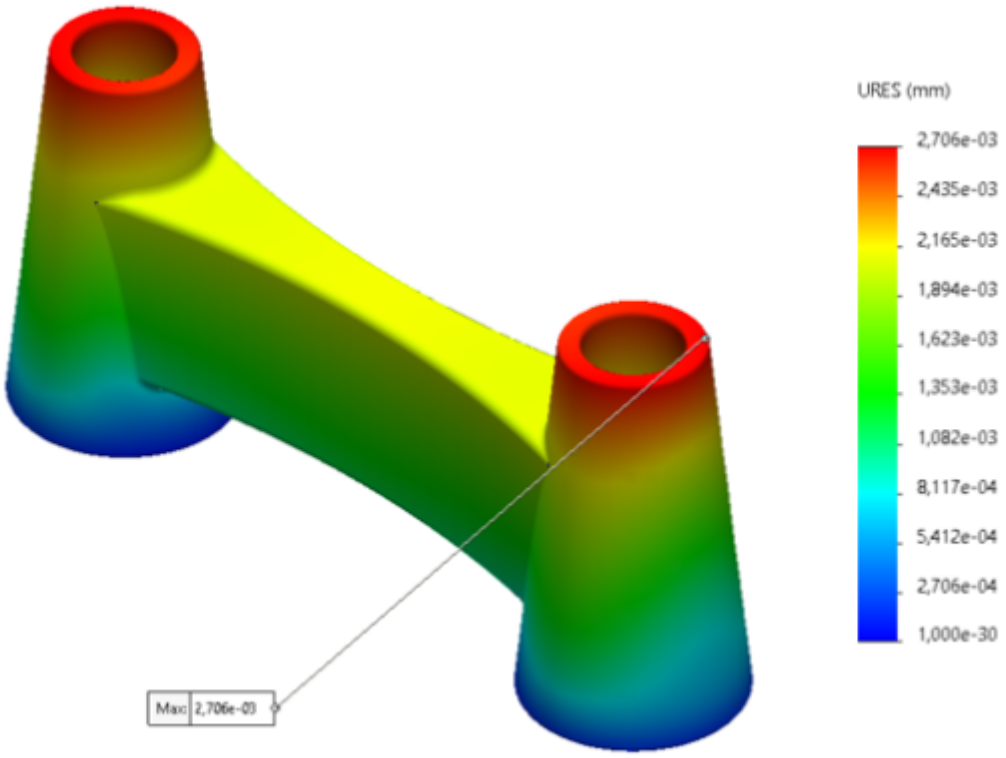

Figure 52: Simulation concrete block displacement test.

The displacement result shows (see Figure 52) that the structure deforms only very slightly under the applied underwater pressure and gravity. The maximum resultant displacement is approximately 2.706×10^{-3} mm, which is only 0.0027 mm. This is extremely small, meaning the structure remains very stiff under the simulated load case. The largest displacement occurs near the upper edges of the cone-shaped supports, especially around the openings, while the lower areas show almost no displacement. This deformation pattern is expected because the upper parts are less constrained and can move slightly more than the base regions. Overall, the displacement result confirms that the structure experiences negligible deformation at a depth of approximately 30 meters, so from a stiffness point of view the design appears safe for this simplified underwater loading condition.

Strain test concrete block

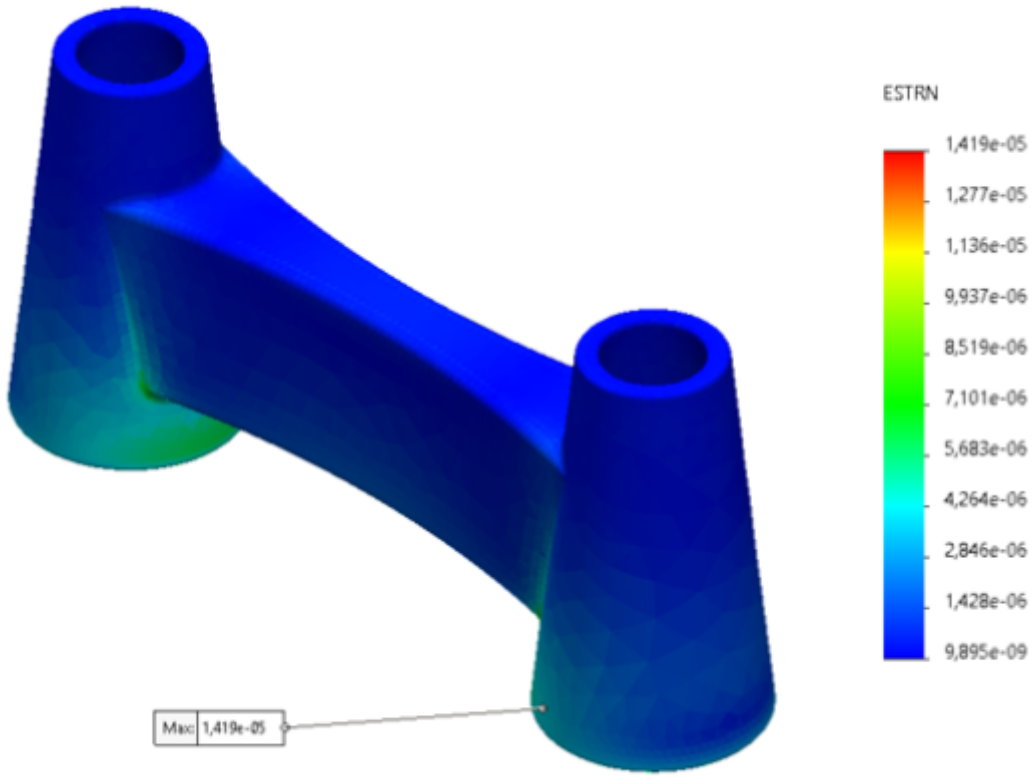

Figure 53: Simulation concrete block strain test.

The strain result (see Figure 53) shows that the structure experiences very low deformation under the applied underwater pressure and gravity. The maximum strain is approximately 1.419×10^{-5}, which is very small and indicates that the material is only slightly stretched or compressed. The highest strain occurs around the transition zones between the cone-shaped supports and the central beam, especially near the lower connection areas. This matches the stress result, where the same regions also showed the highest stress concentrations. However, the strain values remain low, meaning the structure is not deforming significantly and the material is behaving safely within the assumed load case. Overall, this strain plot supports the conclusion that the design is structurally stable under the simplified 30-meter underwater pressure condition.

Factor of safety concrete block

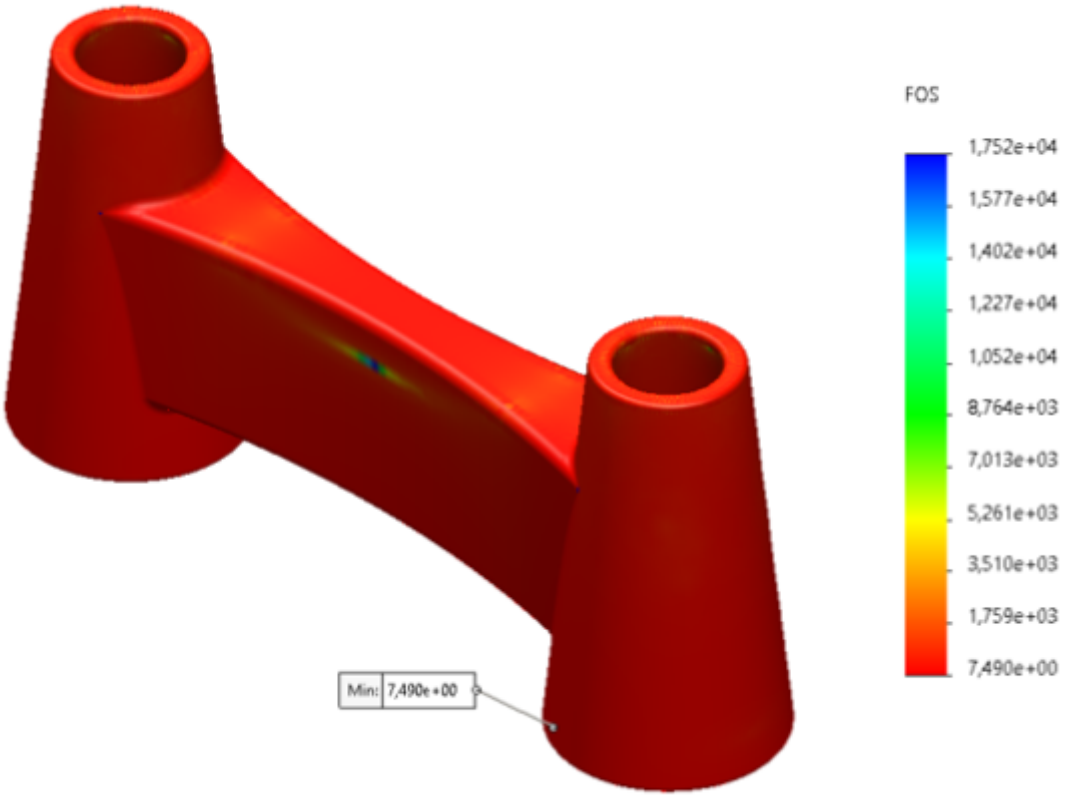

Figure 54: Simulation concrete block factor of safety.

The factor of safety (see Figure 54) plot confirms that the structure remains safe under the applied underwater pressure and gravity load case. The minimum factor of safety is approximately 7.49, which is well above the usual minimum requirement of 1.5–2.0 for many static structural checks. This means that the maximum stress in the structure is still far below the assumed material strength. Although most of the model appears red, this does not mean failure; it only means these areas have the lowest safety factor within the selected color scale. Since the minimum value is still around 7.5, the structure has a large safety margin. The most critical region is again located near the connection between the cone-shaped support and the central beam, which matches the stress and strain results. Overall, the design appears structurally safe for this simplified 30-meter underwater loading condition.

Strength test full structure

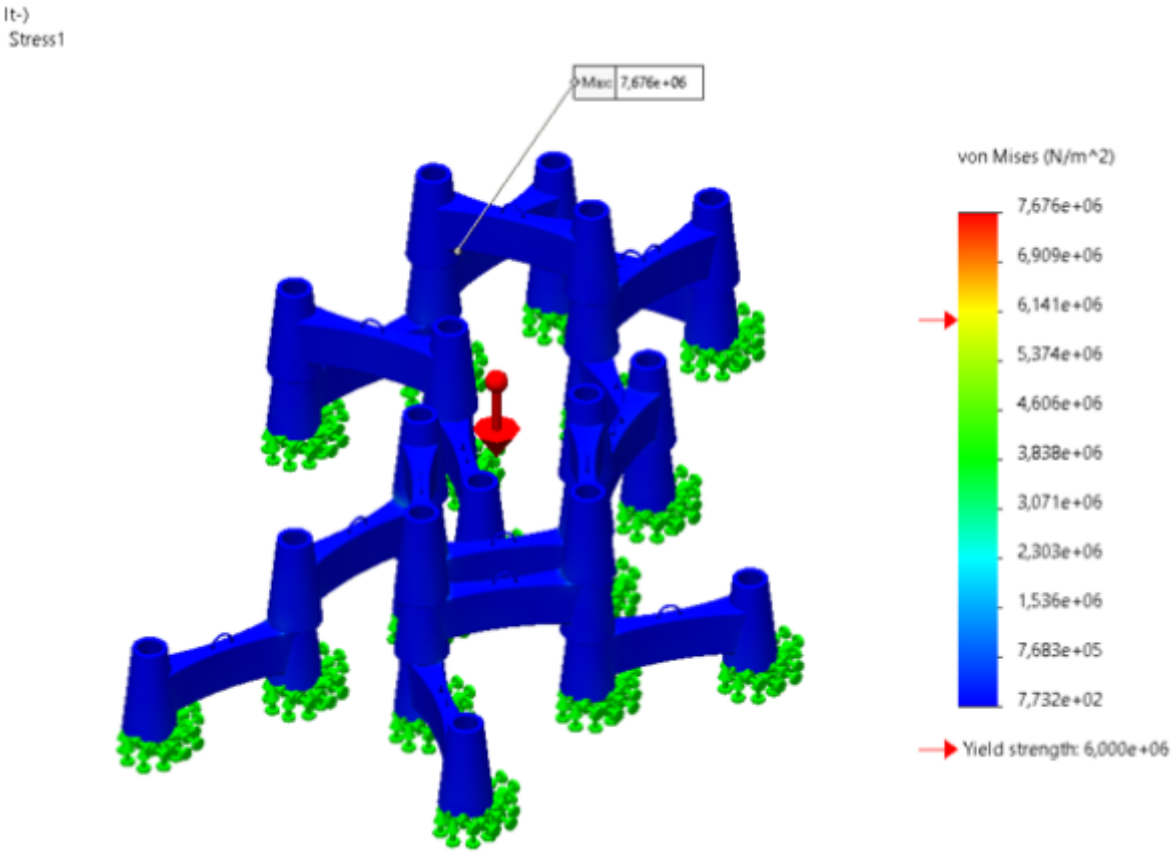

Figure 55: Simulation full structure strength test.

The von Mises stress (see Figure 55) locally exceeds the assumed yield strength, but since the material is concrete-based, von Mises stress and yield strength are not the most appropriate failure criteria. This result should therefore not be interpreted directly as failure. Instead, the maximum principal tensile stress should be checked, because cracking in concrete usually starts due to tensile stress. In addition, the compressive strength should also be evaluated to verify whether the material remains safe under compression. The high von Mises value mainly indicates a local stress concentration, most likely near a connection or constrained area. If the maximum principal tensile stress stays below the tensile strength and the compressive stress stays below the compressive strength of the material, the structure can still be considered acceptable for this simplified load case.

Tensile strength test full structure

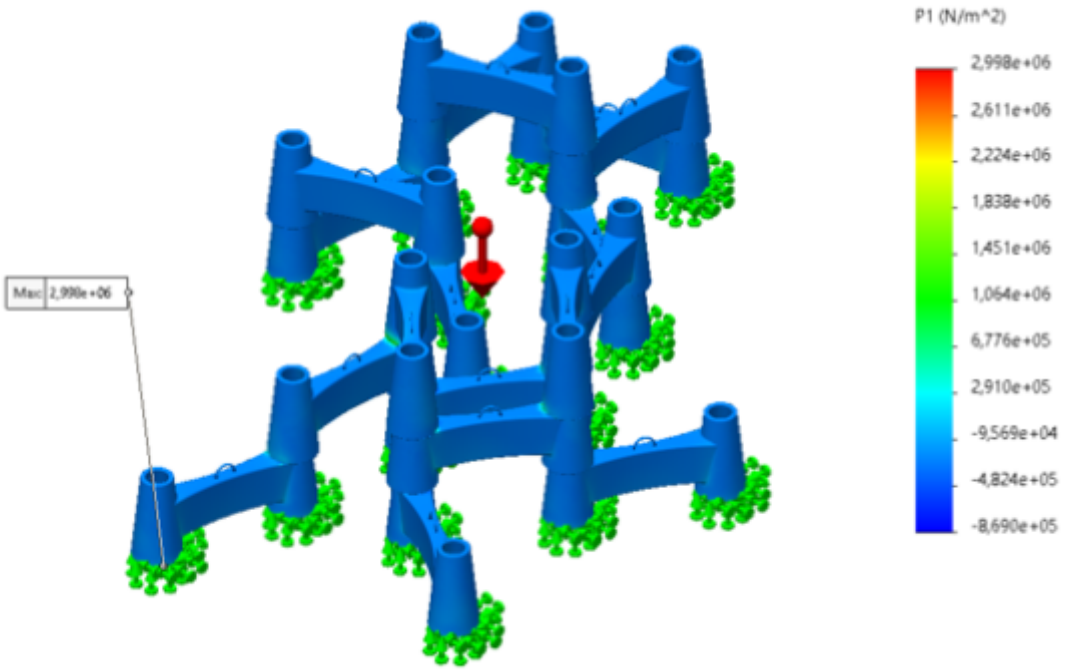

Figure 56: Simulation full structure tensile strength test.

The maximum principal tensile stress (see Figure 56) is approximately 2.998 MPa, which is lower than the assumed tensile strength of 6.0 MPa. This gives an estimated safety factor of about 2.0 against tensile cracking. Since concrete-based materials are more likely to fail by cracking than by yielding, this result is more relevant than the von Mises stress. The result indicates that the structure remains acceptable in tension for this simplified load case. However, the compressive stress should also be checked separately by evaluating the third principal stress or compressive stress result.

Compressive strength test full structure

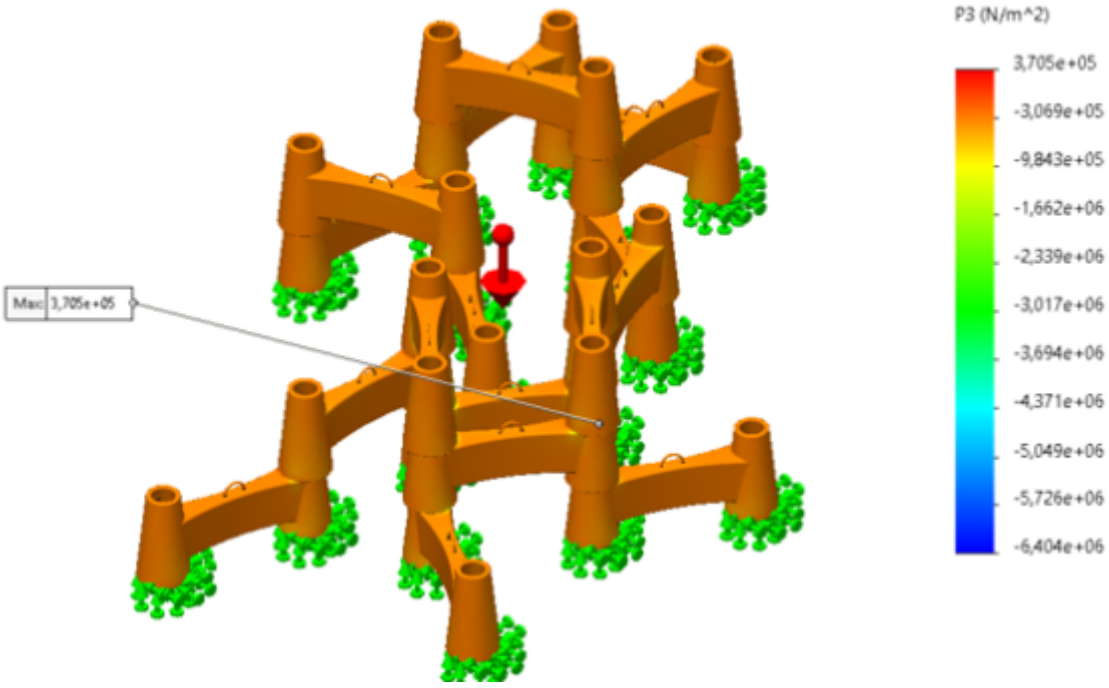

Figure 57: Simulation full structure compressive strength test.

The third principal stress (see Figure 57) was evaluated to check the compressive behavior of the concrete-based material. The maximum compressive stress is approximately 6.404 MPa, which is significantly lower than the assumed compressive strength of 55 MPa. This gives an estimated safety factor of about 8.6 against compressive failure. Therefore, the structure appears safe under compression for this simplified load case. Combined with the first principal stress result, which remains below the tensile strength, the structure can be considered acceptable from both a tensile cracking and compressive strength point of view.

Displacement test full structure

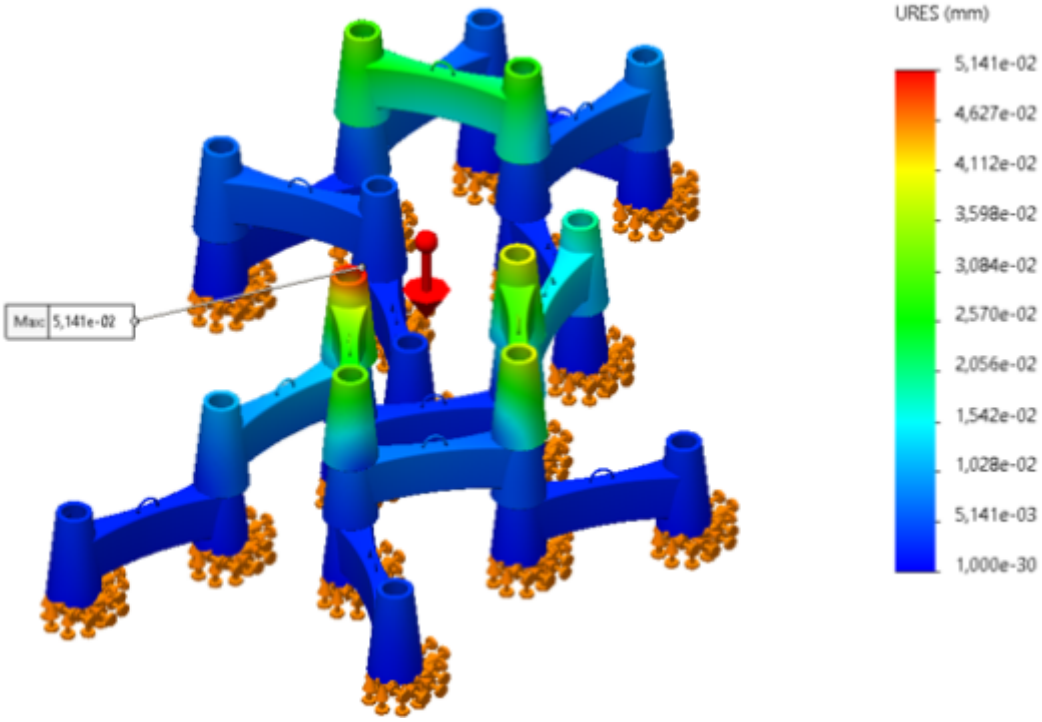

Figure 58: Simulation full structure displacement test.

The displacement plot shows (see Figure 58) that the maximum resultant displacement is approximately 5.141×10^{-2} mm, or 0.0514 mm. This is a very small deformation, so the structure remains quite stiff under the applied load case. The largest displacement occurs locally near one of the upper support/connection areas, while most of the structure stays in the lower displacement range. This is expected because the connected structure can deform slightly more at the upper and less constrained regions, while the fixed lower supports remain almost stationary. Overall, the displacement result is acceptable and confirms that the structure does not experience significant deformation under the simulated underwater pressure and gravity loading.

Strain test full structure

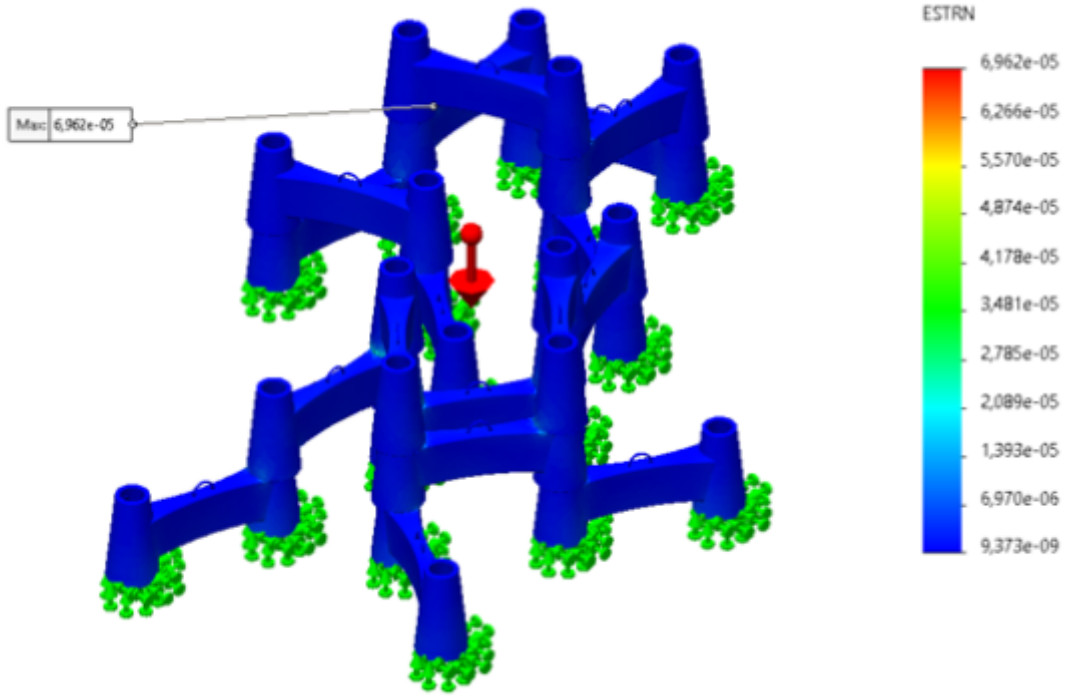

Figure 59: Simulation full structure strain test.

The strain plot (see Figure 59) shows a maximum strain of approximately 6.962×10^{-5}. This is still a very small strain value, meaning the structure only deforms slightly under the applied underwater pressure and gravity loading. The highest strain occurs locally near one of the beam-to-support connection zones, which is consistent with the previous stress and displacement results. Most of the structure remains in the blue region, indicating low strain levels overall. Together with the principal stress results, this suggests that the structure behaves in a stable way and does not experience excessive deformation in this simplified load case.

Factor of safety test full structure

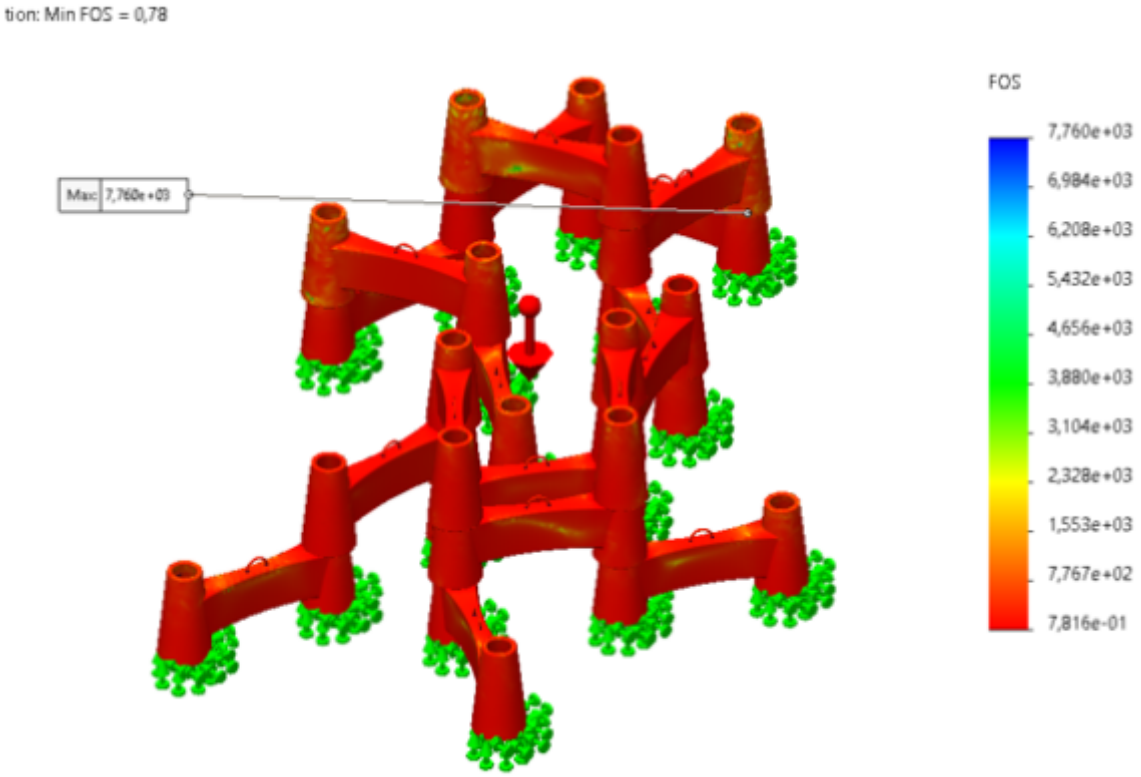

Figure 60: Simulation full structure factor of safety test.

This FOS plot (see Figure 60) gives a minimum factor of safety of approximately 0.78, which means that according to the standard SolidWorks FOS calculation, the local stress is higher than the assumed allowable/yield value. However, because this material is concrete-based, this result should not be interpreted in the same way as for a metal. The FOS plot is based on the selected strength criterion, often related to von Mises/yield strength, which is not the most suitable failure criterion for concrete. For this structure, the principal stress results are more relevant: the maximum principal tensile stress was about 2.998 MPa, which is below the assumed tensile strength of 6.0 MPa, and the maximum compressive stress was about 6.404 MPa, which is far below the assumed compressive strength of 55 MPa. Therefore, even though the standard FOS plot shows a local value below 1, the concrete-specific checks suggest that the structure remains acceptable for this simplified load case. The low FOS mainly indicates a local stress concentration and should be used as a warning point, especially near the beam-support connections, rather than as direct proof of failure.

General conclusion

The updated assembly simulations show that the structure behaves acceptably under the simplified underwater load case. Although the von Mises stress and the standard SolidWorks factor of safety indicate local critical areas, these results should not be interpreted directly as failure because the material is concrete-based. For this type of material, the principal stresses are more relevant. The maximum principal tensile stress is approximately 2.998 MPa, which remains below the assumed tensile strength of 6.0 MPa, meaning that the risk of tensile cracking is limited. The maximum compressive stress is approximately 6.404 MPa, which is far below the assumed compressive strength of 55 MPa, so the structure is also safe in compression. The maximum displacement is only 0.0514 mm, and the maximum strain is approximately 6.962×10^{-5}, indicating that the overall deformation remains very small. The most critical zones are located around the beam-to-support connections, where local stress concentrations occur. Overall, the structure can be considered acceptable for this simplified 30-meter underwater pressure and gravity load case, but the connection zones should be monitored or improved if a higher safety margin is required.

7.5 Smart System

This section presents the smart system developed for Maris Habitats. The smart system is designed to collect environmental data around the habitat and store it for later analysis. Instead of using real-time underwater communication, the final solution is based on local data logging, where the collected measurements are saved on an SD card inside a removable smartlogger.

The section explains the development of the system, including the selected hardware, electronics, software, and packaging concept. The purpose is to show how the monitoring system supports the final product while keeping the design robust, low-power, and easier to maintain.

7.5.1 Hardware

This subsection describes the hardware design of the smart system. It presents the main physical and electronic components needed for data collection, power supply, and storage. This includes the microcontroller, battery, sensors, SD card module, and waterproof enclosure.

The hardware was selected with focus on low energy consumption, reliability, and suitability for underwater conditions. The subsection also explains why the final solution uses a removable smartlogger instead of a more complex buoy-connected system.

7.5.1.1 Black Box Diagram

Throughout this project, various approaches to data collection were explored. Initially, Version 1 was developed, while this version enabled continuous data communication, it proved to be highly complex and more prone to potential failures. Based on these findings, Version 2 was selected as the preferred because it prioritises robustness, reduced complexity, and ease of deployment, while accepting compromises regarding limited operational duration and the lack of continuous data communication.

Version 1 (V1) Buoy-Connected System

Figures 61 and 62 present the smart system black box diagram. The system corresponds to a living laboratory where the:

- Sun (top left corner) is the source of energy. A buoy equipped with solar panels on top will store power in a battery and provide power to the system.
- Sea water (bottom left corner) is the growth medium. Four sensors will monitor the water environmental conditions (diamond).
- Fish and sea life (bottom right corner) are under observation. Fish and algae will be monitored (presence and size) to determine biodiversity and measure photosynthetic effects and chlorophyll on surfaces.

All this data will be collected and combined and sent to the On Board Computer (OBC) while also getting a timestamp by a Real Time Clock (RTC). All this will be powered by the battery through a Power Management System (PMS) that received the power from the buoy.

Both the buoy and the structure will have a positioning module, that will count with an Inertial

Measuring Unit (IMU), a Doppler velocity Log (DVL) and a Global Navigation Satellite System (GNSS) receiver, to have everything registered about the position of both elements and make sure nothing goes wrong due to external factors such as storms, currents or human factors.

From the structure to the buoy, there will be a chain and a cable, for both structural support and data and power connection between the two elements. Finally, all the data collected will be sent to a data center, this will be done through the standard Iridium Satellite Network.

The main output will be a report with all the obtained data.

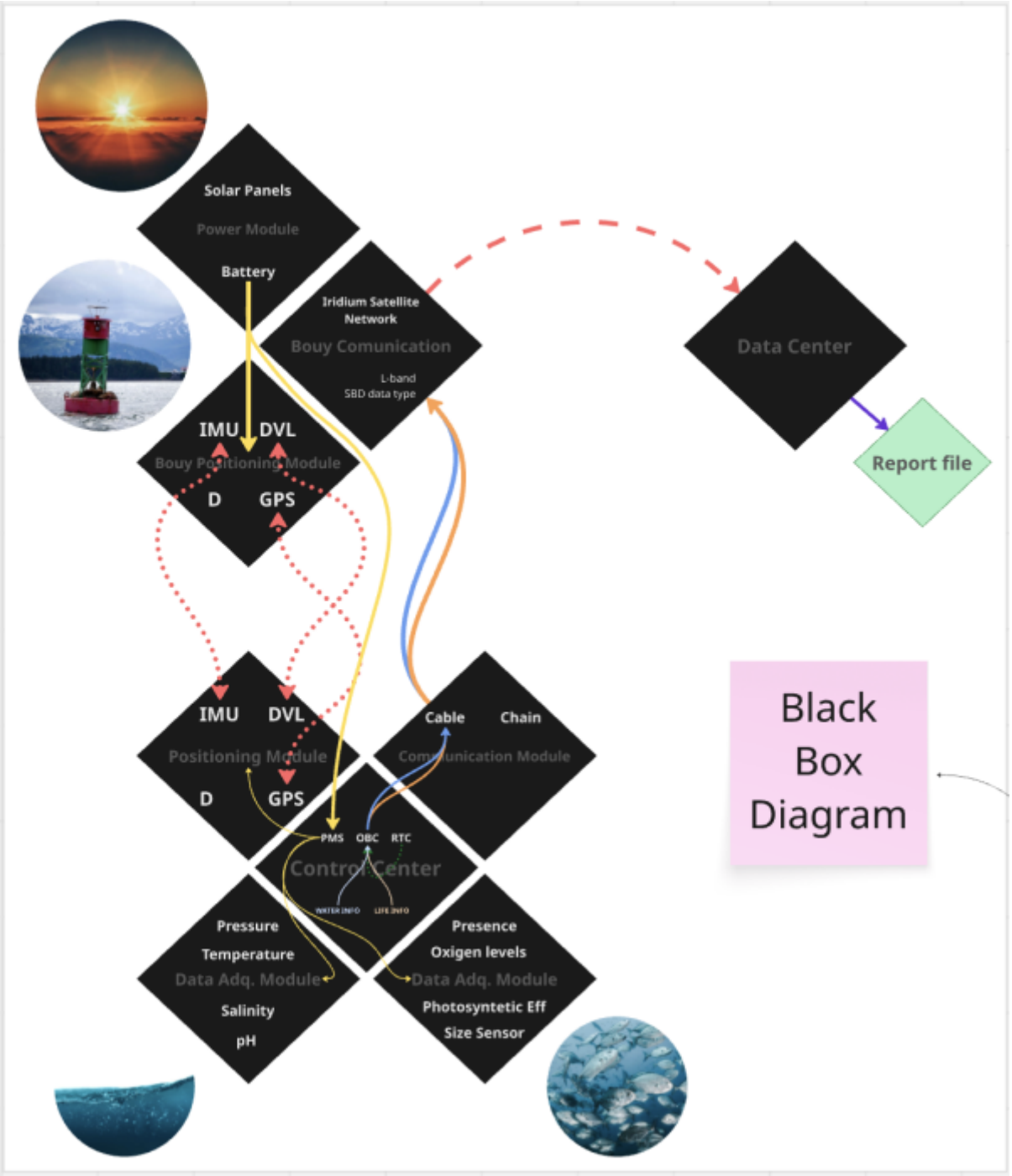

Figure 61: Black Box Diagram V1

Version 1.5 (V1.5) Buoy-Connected System 1.5

Version 1.5 is presented in a more text-based format instead of graphical form, as it is a more

accurate representation of the system's black-box diagram. It is also a simplified.

Figure 62: Black Box Diagram V1.5

Version 2 (V2) Smart Block System

In this configuration, the system is based on a "Smart Block" that houses all electronic components, including the power supply, sensors, and data storage, eliminating the need for external infrastructure such as surface buoys, solar panels, or cable connections.

The entire system is powered by a LiFePO4 battery. Environmental data is collected via sensors that measure pressure (depth), temperature, pH, and conductivity. All collected data is stored locally on a Secure Digital memory card (SD card); real-time transmission is not possible. Battery replacement and data retrieval are carried out through a scheduled maintenance procedure involving a diver. The estimated battery lifetime of the system is approximately 340 days, which limits the frequency of required maintenance operations to roughly once per 11 months. When battery replacement is necessary, a diver descends to the installation site and retrieves the Smartbox from the seabed. The enclosure must be brought to the surface in order to be opened safely. Battery replacement, sensor cleaning, and removal of organic growth from the electrical box are carried out aboard the vessel. The SD card is replaced at the same time to ensure secure and continuous data storage. After completion of the maintenance procedure, the Smartbox is redeployed and repositioned at its original location on the seabed. This integrated maintenance strategy allows both power supply and data storage components to be serviced during a single operation. After retrieval, the data is transferred to a research facility for analysis and evaluation, ultimately contributing to environmental monitoring and reporting.

Figure 63 shows the smart block systems black box diagram.

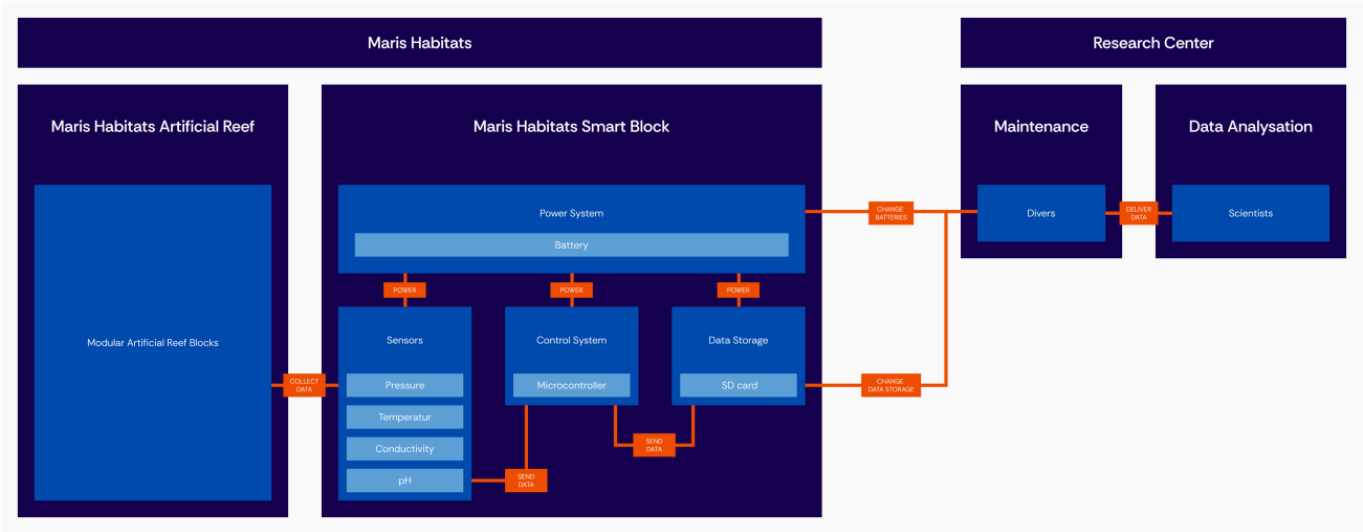

Figure 63: Black Box Diagram V2

7.5.1.2 Electronics

Microcontroller & Battery

The ESP32 was selected as the microcontroller for this project due to its advanced power-management features and processing capabilities. A key requirement of the system is low energy consumption, and the ESP32 supports deep sleep modes with a current consumption of approximately 10 µA. During deep sleep, most of the chip is powered down while the built-in RTC remains active, allowing the microcontroller to wake up at predefined intervals without requiring external timing hardware.

This capability makes the ESP32 particularly suitable for applications that spend most of their time in a low-power state and only wake periodically to perform measurements or other tasks. By minimizing the active time and remaining in deep sleep for the majority of the operating cycle, the overall energy consumption of the system can be significantly reduced, resulting in longer battery life.

Compared to the other evaluated alternatives, presented in Table 27 the ESP32 was the only platform that combined deep sleep support with an integrated RTC and extremely low sleep current. These characteristics made it the most suitable choice for an energy-efficient embedded system.

Table 27: Comparison of microcontrollers

Microcontroller	Wi-Fi	Bluetooth	Deep Sleep	RTC	Flash Memory	Current (Active)	Current (Sleep)
Arduino Uno R4 WiFi	Yes	No	No	No	256 KB	~80 mA	~48 mA
ESP32	Yes	BLE 5	Yes	Yes	4 MB	~240 mA	~10 µA
Raspberry Pi Pico W	Yes	BLE (via CYW43)	Yes	No	2 MB	~40 mA	~180 µA

The system is powered by a 12 V 20 Ah $LiFePO_4$ battery. To prevent excessive battery degradation and to extend its service life, the battery is not discharged fully. A minimum state of charge of 20 % is enforced, meaning that only 80 % of the nominal battery capacity is used. The battery's nominal voltage is 12.8 V. The total power consumption of the system during active operation is 1.505 W.

To minimize energy usage, measurements are performed once per hour. The system is designed to remain active for only 1 minute per hour, which is sufficient for sensor stabilization and for writing the

collected data to the SD card.

Battery capacity: 12.8 V × 20 Ah × 0.8 = 204.8 Wh

Daily energy consumption (1 min/hour operation): 1.505 W/60 × 24 h = 0.602 Wh/day

Number of days: 204.8 Wh / 0.602 Wh/day = 340.199 days

Based on these calculations, the system can operate for approximately 340 days on a single battery charge. The power consumption during deep sleep mode was neglected in the battery life estimation because it is several orders of magnitude lower than the active current consumption. With a deep sleep current of approximately 10 µA, its contribution to the total energy consumption is negligible for this application

Sensors

Selecting sensors was quite challenging, as most sensors such as pH and conductivity probes are designed for temporary measurements and not for long term submersion. Additionally, the sensors must withstand the high pressure at the seabed, and many are not suitable for seawater. This resulted in expensive sensors, mainly sourced from suppliers in the United States.

The BarXT sensor **[142]** measures both pressure and temperature. The pressure measurements can be used to calculate depth. Unlike systems based on 5 V microcontrollers, the ESP32 operates with 3.3 V logic levels, which are compatible with the sensor's Inter-Integrated Circuit (I^2C) interface. Therefore, no I^2C level converter is required, simplifying the hardware design and reducing power consumption.

The pH sensor **[143]** is sourced from Atlas Scientific. It is used together with a pH module **[144]**, which converts the signal into an analog signal that can be directly read by the microcontroller's analog inputs.

For the conductivity sensor, no similar ready-made solution was available. It outputs a current signal of 4 mA–20 mA, which must be converted into a voltage of 0 V–3.3 V to be read by the ESP32. This is done using a 160 Ω resistor, according to Ohm’s law (U=I×R).

0.004 A × 160 Ω = 0.64 V

0.020 A × 160 Ω = 3.2 V

Enclosure

The enclosure is one of the most critical and costly components of the system, as it must withstand high external pressure at the seabed. Suitable enclosures are therefore difficult to source.

Condensation is expected to form inside the enclosure as the air trapped inside is cooled by the surrounding seawater. This temperature difference can lead to moisture accumulation, increasing the risk of corrosion and electrical failures. To mitigate this risk, silica gel desiccant packets are placed inside the enclosure to absorb excess moisture.

The sensors from Atlas Scientific use ¾“ NPT (National Pipe Tapered) threads, while the enclosure is

designed with M10 threads. This requires sealing the existing holes and machining new threaded openings in the enclosure.

However, the sensor from Blue Robotics is equipped with M10 threads, allowing direct installation into the enclosure without modification.

Table 28 presents a comprehensive overview of all sensors and components included in the system. The electrical schematics are shown in Figure 64.

Table 28: Sensor and Electronic Components

Item	**Type**	**Power supply (V)**	**Operating current (A)**	**Output**	**Price**	**Quantity**	**Supplier**	**Link**	**Comment**
BarXT	Depth / Pressure / Temp	2.5 - 5.5	0.0015		329.19 €	1	Bluerobotics	link	
Surveyor™ Analog pH Sensor / Meter	Ph module	3.3 - 5.5	0.003		21.52 €	1	Atlas Scientific	link	
Industrial pH Probe – No Temp	Ph test probe	3.3 - 5.5			226.95 €	1	Atlas Scientific	link	
Industrial Conductivity Kit K 1.0	Conductivity	9.0 - 36.0	0.045		595.05 €	1	Atlas Scientific	link	includes calibration certificate
Adafruit 254	SD - module	3.3 - 6	0.1		6.45 €	1	Mouser	link	
ESP32-C3-DevKitM-1-N4X	Microcontroller	6 - 24	0.04 (without wifi and bluetooth)	5 V / 3.3 V	6.80 €	1	Mouser	link	
DFR0570	Buck converter	5.5 - 28		3.3 V	2.80 €	1	Mouser	link	
FDMM004GMC-XE00	MicroSD - card				21.88 €	1	Farnell	link	
MC3090082	Silica gel (moisture absorber)				42.26 €	1	Farnell	link	Pack of 100
LiFePO4 battery	LiFePO4 battery			20 Ah 12 V	76.24 €	1	Innpo	link	
Watertight Box 5L	Underwater electrical box				805.66 €	1	Bluerobotics	link	
WetLink Penetrator Blank	Penetrator blank (M10)				70.50 €	15	Bluerobotics	link	4.70 € * 11
MCMF0W4BB2500A50	250 Ω Resistor				0.55 €	1	Farnell	link	
Adafruit 2670	Perfboard / Breadboard				4.26 €	1	Mouser	link	Pack of 10
M316 SOA2CSS50-	M3 screws for perfboard				5.55 €	1	Farnell	link	Pack of 50
Total			**0.1895 A**		**2215.66 €**				

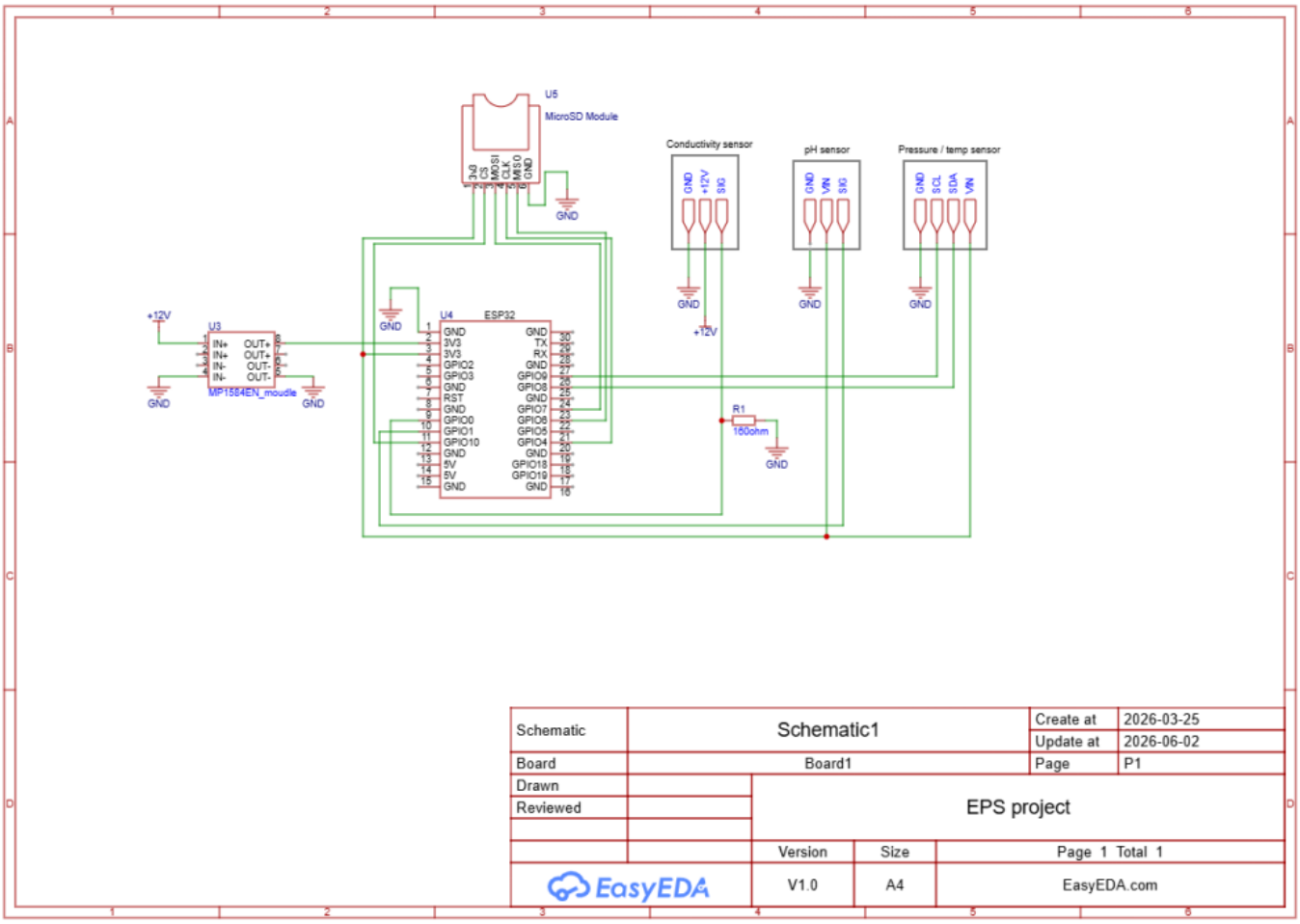

Figure 64: Electrical schematic overview

The use of an imaging system was initially considered to monitor marine life development. However, this approach has been deprioritized, as the primary focus of the project has shifted toward the analysis of quantitative sensor data.

Sensor-based measurements provide continuous, objective, and scalable insights into environmental conditions, which are more closely aligned with the project's core objectives.

The inclusion of a camera system is therefore limited to supporting species identification, specifically to document the presence of fish within the reef environment. In addition, visual documentation of the reef structure will be conducted during annual maintenance operations, during which images of the installation will be captured once per year.

Figure 65 shows what the enclosure will look like with all the electronics inside. The image on the left includes the sensors. The picture on the right is without the sensors to show how much space the rest of the electronics will use.

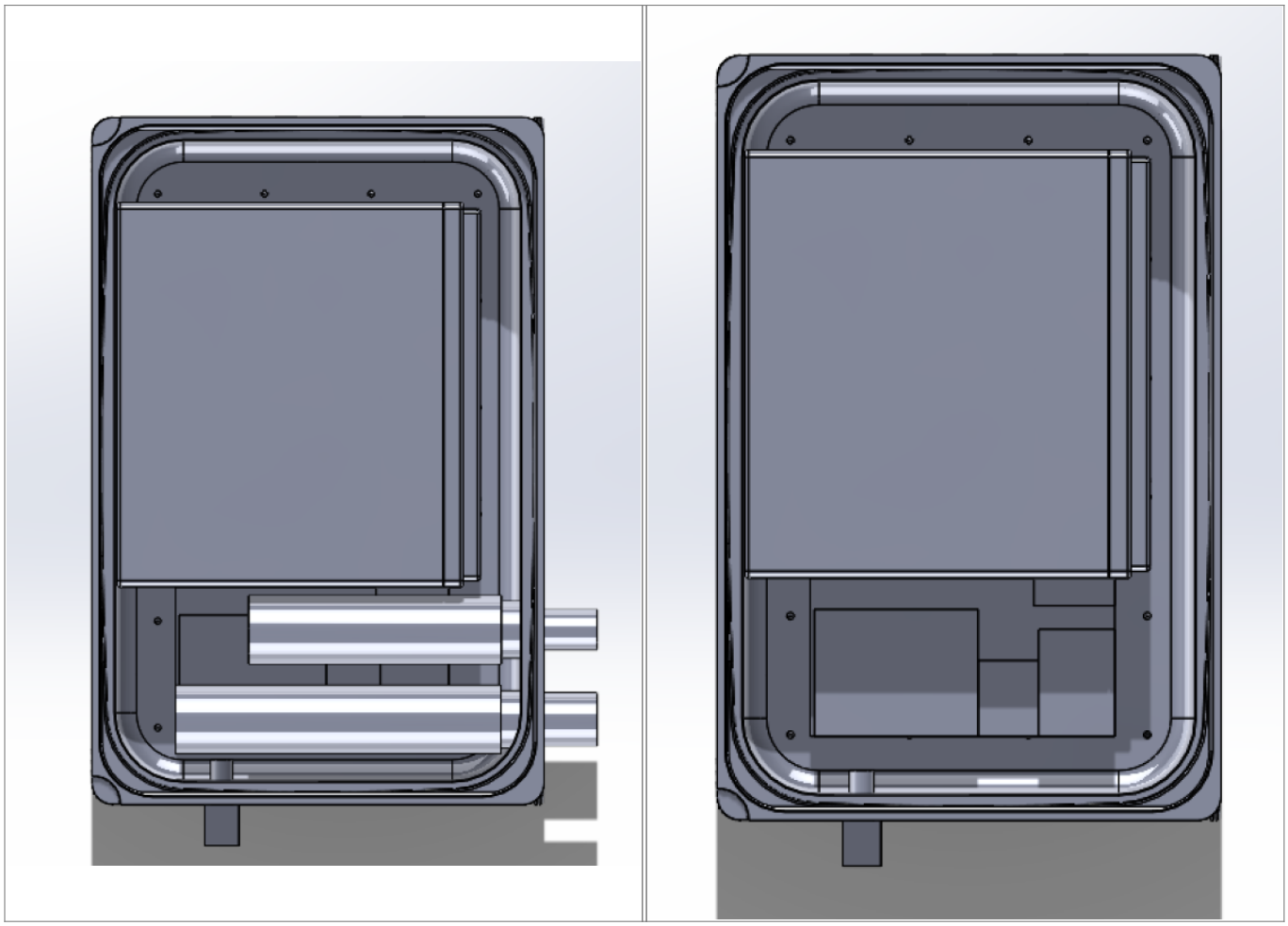

Figure 65: Inside the enclosure with and without sensors.

7.5.2 Software

The final Maris Habitats product is designed without a mobile application or real-time underwater communication. Instead, the system uses local data logging. This means that all environmental data collected by the smartlogger is stored directly on an SD card inside the removable sensor unit. The data is retrieved during scheduled maintenance, when the smartlogger is taken to the surface.

The software runs on the microcontroller inside the smartlogger. Its main purpose is to control the measurement cycle, read data from the sensors, organize the collected values, and store them safely on the SD card. This approach reduces system complexity, lowers power consumption, and avoids the need for continuous underwater communication.

When the final product is activated, the software first initializes the microcontroller, sensors, real-time clock, and SD card module. The real-time clock is used to give each measurement a timestamp, so that the data can be analyzed later in the correct time order. If the SD card is detected correctly, the software creates or opens a data file for storing the measurements.

During operation, the system performs measurements at predefined time intervals, for example once per hour. In each measurement cycle, the microcontroller wakes up, powers or activates the sensors, waits briefly for the readings to stabilize, and then collects data such as temperature, pressure/depth, pH, and conductivity. After the values are collected, they are formatted into a structured data line and written to the SD card.

An example of the stored data format is shown below:

```
Timestamp;Temperature;Pressure;Depth;pH;Conductivity
2026-06-01 12:00;16.4;5.02;50.1;8.10;52.3
2026-06-01 13:00;16.5;5.01;50.0;8.09;52.1
2026-06-01 14:00;16.5;5.03;50.2;8.11;52.4
```

After writing the data, the file is closed to reduce the risk of data loss. The system then returns to a low-power state until the next scheduled measurement cycle. This is important because the final product is intended to operate for a long period on battery power.

The SD card is not accessed continuously by the user. Instead, the smartlogger is retrieved during planned maintenance. At this point, the SD card can be removed or replaced, and the stored data can be transferred to a computer for analysis. The same maintenance operation can also include battery replacement, sensor inspection, and sensor cleaning.

7.5.3 Packaging

The packaging design was planned separately for the Smart Module and the Reef Block because these parts have different sizes, weights, and protection needs. The Smart Module includes the Smartlogger and the Smartlogger attachment. The Smartlogger contains the electronic components, battery, SD card, and sensors. Therefore, the Smart Module needs protection from shock, dust, moisture, and vibration during transport. On the other hand, the Reef Block is much heavier and does not require the same type of protective case, so its transport solution must focus more on stability, safe handling, and movement prevention.

Figure 66 shows the packaging concept for the Smart Module. The design is inspired by reusable waterproof hard cases, such as the NANUK 935 Pro Photo Kit. This type of case is suitable for sensitive equipment because it is designed to protect the contents from impact, dust, water, and vibration during transport **[145]**. The NANUK 935 case is made with a lightweight NK-7 resin shell and is described as impact-resistant and shock-absorbent, which makes it appropriate for transporting electronic monitoring equipment **[146]**.

Inside the case, the Smart Module is placed in a custom EVA foam insert. EVA foam was selected because it is lightweight, durable, moisture-resistant, and able to absorb shock. Its closed-cell structure gives it low water absorption, and its cushioning properties make it suitable for protecting sensitive components during transport **[147]**. The foam insert is shaped around the Smart Module to reduce movement inside the case and to keep the Smart Module and assembly instruction card organized.

The sensors and electronic components are integrated inside the Smartlogger, which is part of the Smart Module. Therefore, no separate sensor set or external sensor cables are included in this packaging concept. An assembly instruction card is included to show how the Smartlogger is attached to the Smartlogger attachment and how the protective lid is added before deployment. The EVA foam insert is not considered a single-use material in this concept because it can be reused with the same hard case for storage, deployment, maintenance, and retrieval operations.

Figure 67 shows the transport concept for the Reef Block. Since this part is heavy and mainly made of concrete, it is transported separately on a wooden pallet instead of being placed inside the blue hard case. Wooden pallets are suitable for transporting heavy goods because they provide a stable load

carrier and allow handling with forklifts **[148]**. The Reef Block is fixed to the pallet using straps to keep the load stable and reduce movement during transport **[149]**. This solution reduces unnecessary packaging material while keeping the concrete block stable during handling and transport.

The packaging also considers reuse. The waterproof hard case can be used repeatedly for storage, deployment, maintenance, and retrieval of the Smart Module. The pallet can also be reused for several transports if it remains in good condition. For the final version, the foam inserts should be replaced only when damaged. In this way, the packaging can protect the product while also reducing unnecessary waste.

These packaging images are concept visuals, so the final packaging may still change after testing. In the next stage, handling and transport tests should be carried out to check whether the hard case, EVA foam insert, pallet, and straps can properly protect the components under real transport conditions.

Figure 66: AI-generated packaging concept for the Smart Module transport case

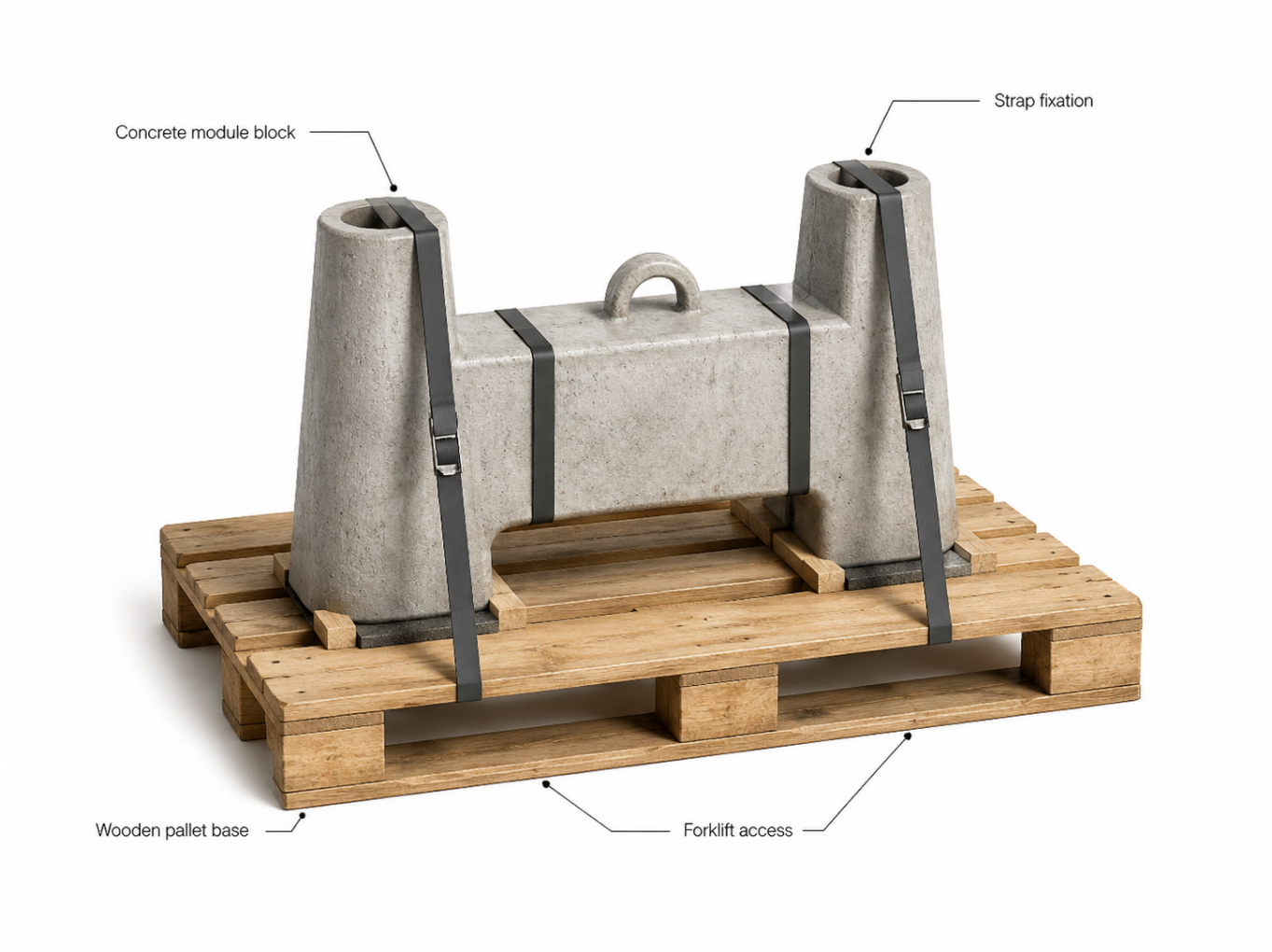

Figure 67: AI-generated transport concept for the Reef Block

7.6 Prototype

The prototype is designed to measure similar parameters to a Conductivity, temperature and Depth (CTD) system, but instead of using a conductivity sensor to estimate salinity, it uses a TDS sensor. This is a significantly cheaper alternative and is sufficient for early-stage testing, where the main goal is to validate the system concept rather than achieve final measurement accuracy. The pH sensor is also excluded from the prototype in order to reduce cost, since it is not essential for testing the basic functionality of the system. Apart from the sensor selection and reduced measurement precision, the prototype follows the same general system design as the final product. For the enclosure, a simple airtight plastic container (e.g. from IKEA) is used as a temporary solution. This significantly reduces costs compared to waterproof enclosures and is sufficient for controlled testing environments. To ensure watertight cable penetrations in the prototype, a silicone-based sealant will be used. The same sealant may also be applied around the enclosure lid if leakage is detected during testing.

7.6.1 Structure

Compared to the final designed solution, several modifications are made for the prototype. The structural block is downscaled to 1:3, resulting in a model size of about 26 cm. This allows the structural concept to be tested in a smaller and more practical format. In addition, alternative materials are considered for the prototype structure. The block may either be produced using 3D

printing or cast in standard concrete, rather than using the final material and full-scale production method.

The smartlogger is also simplified compared to the final design. Instead of using a dedicated underwater enclosure, a waterproof plastic box is used as the prototype housing. Holes are drilled in the enclosure for the water-measuring sensors, which are installed through the openings and sealed with adhesive to prevent leakage.

The prototypes pressure sensors can be tested in the pool located in the robotics laboratory. As the prototypes enclosure can't withstand high external pressures, the pool depth of 5 m is considered sufficient for the proof of concept. An additional test setup involves using a controlled environment, such as a sink, where parameters like temperature and TDS values can be more easily manipulated. For example, the TDS level can be adjusted by adding salt to the water.

The enclosure will initially be tested without oil to determine whether it can withstand underwater pressure while protecting the internal electronic components. If the enclosure is not sufficiently pressure-resistant, it will be filled with oil as a pressure-compensation solution. This reduces the pressure difference between the inside and outside of the box while protecting the battery, sensors, and electronic components from direct contact with water.

These changes are made to simplify prototype construction and enable early testing of the system concept before developing the final full-scale solution.

7.6.1.1 Reef block

For the prototype of the reefblock we wanted to make it out of concrete. This meant we first had to design a mold (see Figure 68) and afterwords put the concrete in the mold. The entire mould exists out of 4 different pieces, a right part, a left par, a top cone and a bottom cone.

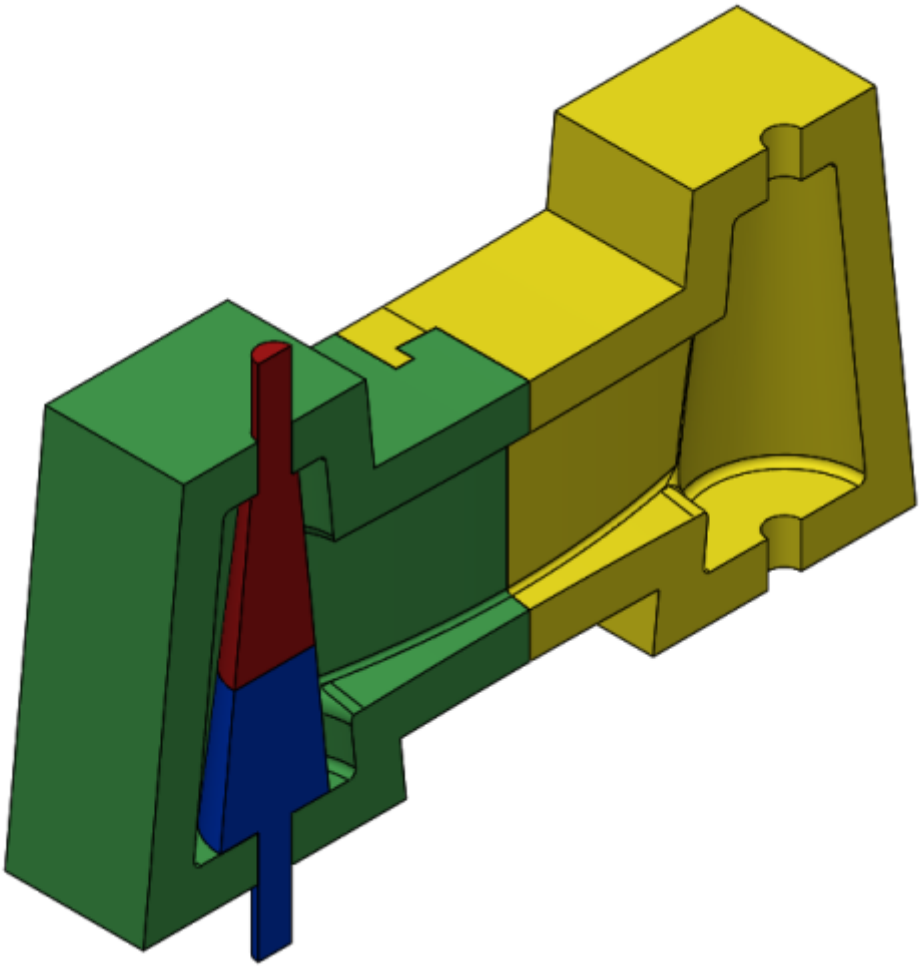

Figure 68: Mold

How to Make the Prototype

Step 1: First, the cement mixture is prepared. This mixture consists of 2 kg of cement and 250 ml of water. It is important to mix it thoroughly until a smooth and consistent paste is formed (see Figure 69).

Figure 69: Making of the cement mixture.

Step 2: After preparing the cement mixture, the mold has to be prepared. First, a plastic film is placed on top of the mold. Then, another plastic sheet is applied on top of the film and covered with oil. This makes it easier to remove the prototype from the mold afterwards (see Figure 70).

Figure 70: Applying film.

Step 3: Next, the cement mixture is placed into the mold, as shown in Figure 71. During this process, it is important not to add too much mixture at once, because the inserts still need to fit properly. After placing the inserts, the entire mold can be tapped gently on the table a few times to make sure the mixture is evenly distributed.

Figure 71: Filling the mold with the cement mixture.

At this point, one half of the prototype is finished. Repeat the same process to create the second half. Once both halves are ready, they can be glued together.

After completing these steps, the prototype should be left to cure for at least 3 to 4 days. Since the prototype is scaled down, the middle section is very thin and can break easily, but this can be fixed with the same glue that is uses to glue to two halves together.

7.6.2 Hardware

The prototype is designed to measure parameters similar to those measured by a CTD system, Conductivity, Temperature, and Depth. However, instead of using a conductivity sensor to calculate salinity, the prototype uses a TDS, Total Dissolved Solids, sensor.

Conductivity measures water’s ability to carry an electrical current. This ability is directly related to the concentration of dissolved ions, such as salts, minerals, and other inorganic materials. TDS, on the other hand, represents the total amount of dissolved substances in the water, including inorganic salts such as calcium, magnesium, potassium, sodium, bicarbonates, chlorides, and sulfates, as well as small amounts of organic matter. TDS is typically measured in mg/L or ppm and is commonly used as an indicator of water quality.

Using a TDS sensor provides a significantly cheaper alternative to a conductivity sensor. For early-stage testing, this is sufficient because the main goal is to validate the overall system concept rather than achieve final measurement accuracy.

In addition to measuring TDS, pressure, turbidity, and temperature are also monitored. Pressure data can be used to calculate depth. Turbidity indicates the presence of suspended particles, while temperature affects the physical and chemical properties of the water. The pH sensor is also excluded from the prototype in order to reduce cost, since it is not essential for testing the basic functionality of the system. Apart from the sensor selection and reduced measurement precision, the prototype follows the same general system design as the final product.

The selected sensors used in the prototype are presented in Table 29.

Table 29: Table of prototype sensors

Sensor	**Type**	**Power supply**	**Operating current (A)**	**Measurement**	**Quantity**	**Link**	**Comment**
SHT21	Temperature	3.3 V	0.0015	-40°C to +125°C	1	link	
SEN0244	TDS (Total dissolved solids)	3.3–5.5 V	0.0060	0–1000 ppm	1	link	
SEN0257	Pressure	5 V	0.0028	0–16 bar	1	link	Not suitable for open seawater
SEN0189	Turbidity	5 V	0.0400	0–3000 NTU	1	link	Measures water turbidity
Total			**0.0503**				

In the prototype, an Arduino Uno R3 is used as the microcontroller. Since the Arduino Uno lacks a built-in RTC, an external RTC module is required to enable accurate timekeeping. The system operates with a logic voltage of 5 V, whereas the SD card reader operates at 3.3 V logic level. Therefore, a logic level converter is necessary to ensure proper communication between components with different voltage requirements.

The prototype is powered by a 9 V, 640 mAh alkaline battery. Due to its limited capacity, the operational time of the prototype is significantly shorter than that of the final system, restricting testing and data collection to a period of only a few hours. Therefore, the prototype is intended primarily as a proof of concept. Since the battery voltage decreases gradually during discharge, the battery cannot be assumed to be fully depleted before the supply voltage falls below the minimum operating voltage required by the electronics. Therefore, only 70% of the nominal battery capacity is considered usable in the present calculations.

The estimated energy consumption is based on the system’s calculated power usage of 0.92 W.

Battery capacity: 9 V * 0.64 Ah * 0.7 = 4.03 Wh

Battery time: 4.03 Wh / 0.92 W ≈ 4 h

The other electronic components used in the prototype are listed in Table 30.

Table 30: Table of electrical components

Product	**Type**	**Power supply**	**Operating current (A)**	**Output**	**Quantity**	**Link**
Arduino ABX00080	Microcontroller	6–24 V	0.038	5 V	1	link
JOY-IT COM-MSD	SD module	3.3 V	0.1		1	link
FDMM004GMC-XE00	MicroSD card				1	link
4022211111	9 V alkaline battery			9 V 0.64 Ah	1	link
MP007080	Battery contact				1	link

RTC Tiny For Arduino	RTC	5 V			1	link
Total			**0.138**			

For prototype testing, a low-cost solution is used both for the enclosure and structural elements. A simple plastic lunchbox can serve as a temporary enclosure, where holes can be drilled for sensor placement, making it suitable for controlled testing before investing in the final underwater housing. In addition, standard cement is used for structural testing, as it provides sufficient strength at a very low cost. These materials are summarized in Table 11.

PLA filament can be used either as an alternative material for the blocks or to create moulds for casting concrete blocks, or as the structure for the prototype instead of concrete. This allows for greater flexibility and repeatability during the design and testing phase. However, PLA is not suitable for long-term structural use in harsh environments, and is therefore primarily intended for prototyping and tooling purposes.

The enclosure used for the prototype is a simplified version of the final system design. To minimize development costs and allow rapid iteration, a standard plastic food container is utilized as the enclosure. To ensure watertight cable penetrations, a silicone-based sealant is applied at all cable entry points. Silicone sealant is chosen due to its flexibility, ease of application, and adequate waterproofing properties. In addition, the sealant may also be applied along the interface between the lid and the enclosure body if leakage is detected during initial testing

If the external hydrostatic pressure exceeds the enclosure’s mechanical limits at greater test depths, an oil-filled enclosure may be used as a pressure-compensation solution. Transformer oil would be the preferred choice due to its superior electrical insulation properties, however, it is difficult to obtain for small-scale prototyping. Therefore, cooking oil is considered as a low-cost and readily available alternative. Although it doesnt provide the same electrical insulation, it is expected to be sufficient for this low-voltage prototype and suitable for short-term experimental testing.

Table 31: Table of low-cost prototype materials (Portugal)

Product	**Type**	**Price (incl. VAT)**	**Quantity**	**Supplier**	**Link**	**Comment**
Cement (CEM II 25kg)	Concrete material	5.39 €	1	Leroy Merlin	link	Used for structural prototype blocks
Plastic lunchbox (single compartment)	Prototype enclosure	3 €	1	IKEA	link	Simple enclosure
Smaller plastic lunchbox	Backup enclosure	1.5 €	1	IKEA	link	Backup option
PLA filament 1kg	3D printing material	14.60 €	1	Filament 3D	link	Backup option
Ceys Total Tech Universal Glue and Sealant 290 ml Transparent	Silicone sealant	8.99 €	1	Leroy Merlin	link	
Continente cooking oil 1L	Oil for enclosure	1.69 €	1	Continente	link	Used only if needed
Total		**35.17 €**				

The final prototype may not utilize the exact components and materials specified in this study; however, functionally equivalent or closely comparable alternatives are expected to be used.

The electrical schematics for the prototype is presented in Figure 72.

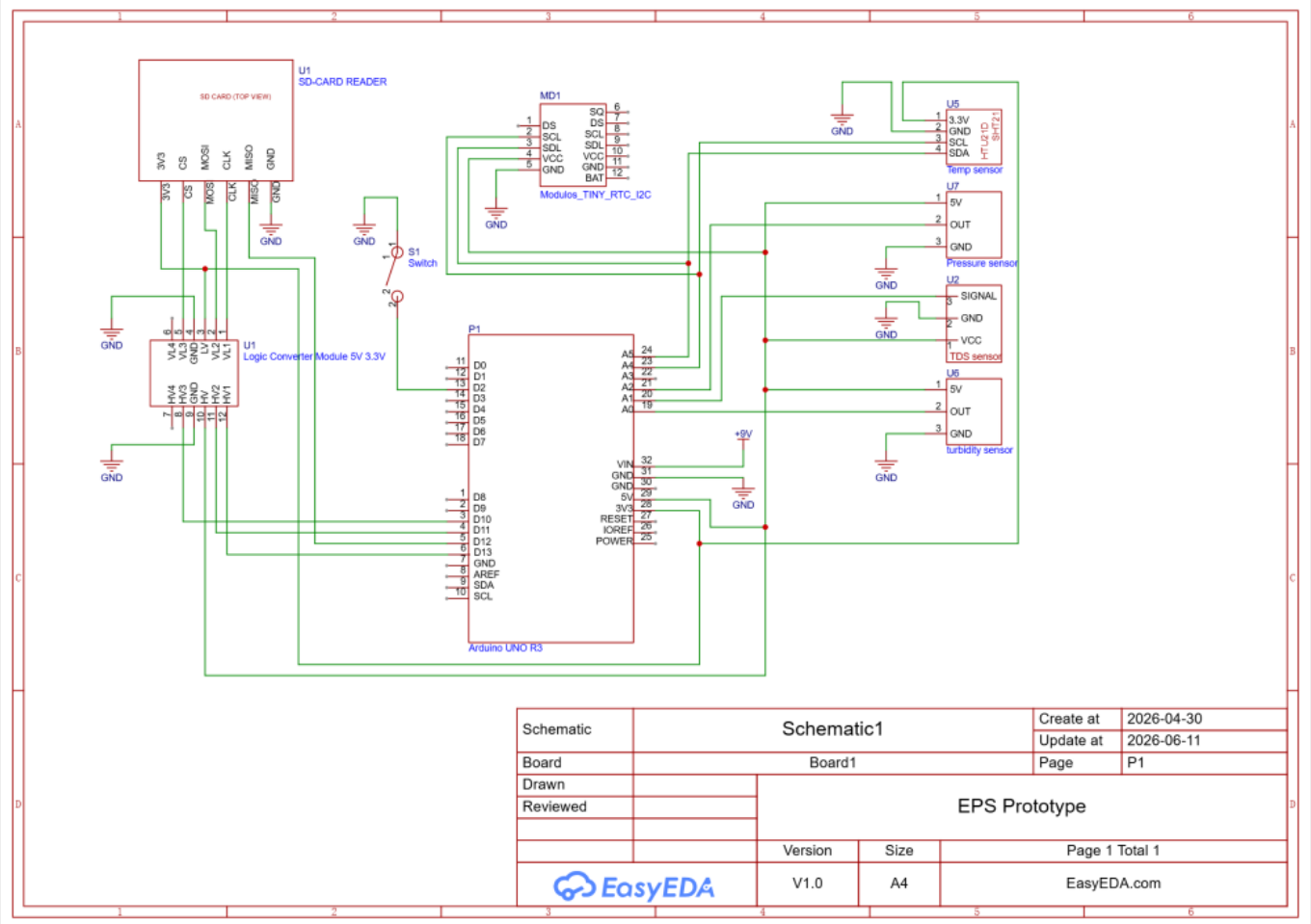

Figure 72: Prototype electrical schematics

7.6.3 Software

Overview

The system is an automatic water quality logger built on an Arduino Uno. It continuously reads data from several sensors and writes the measurements to a Comma-separated values (CSV) file on an SD card every 10 seconds. The system is controlled by a switch that pauses and resumes logging without requiring a restart.

Libraries

The code uses five libraries:

- SHT21.h — reads temperature from the SHT21 sensor over I^2C
- SD.h and SPI.h — handles communication with the SD card
- Wire.h — enables I^2C communication between the Arduino and sensors
- RTClib.h — reads the current date and time from the DS1307 real-time clock over I^2C

Sensors & pins

Sensor	Pin	Protokoll
Turbidity sensor	A0	Analog

Sensor	Pin	Protokoll
TDS sensor	A1	Analog
Pressure sensor	A2	Analog
SHT21 (temperature)	A4/A5	I^2C
DS1307 (real-time clock)	A4/A5	I^2C
SD card	10, 11, 12, 13	SPI
On/off switch	2	Digital

The SHT21 and DS1307 share the same I^2C bus (SDA/SCL) since each device has a unique address — 0x40 and 0x68 respectively.

Setup

When the Arduino powers on, setup() runs once and performs the following in order:

- Initializes I^2C and Serial communication
- Initializes the SD card — halts with an error message if it fails
- Initializes the RTC — if the clock is not running, it sets the time to the compile time of the code
- Fills the TDS buffer with initial readings
- Creates log.csv with a header row if the file does not already exist

The SD card is initialized before the RTC to avoid conflicts on the shared bus during startup.

Main loop

The loop() function runs continuously and handles four tasks:

- Switch monitoring
  - The switch is read every loop iteration.
  - When flipped to the off position, logging is paused and a message is printed to Serial.
  - When flipped back, logging resumes.
  - This allows the system to be safely disconnected without risking data corruption, since the SD file is always closed after each write.
- Sensor readings
  - On every loop iteration the following are measured:
    - Turbidity — the analog value from A0 is averaged over 10 readings to reduce noise, then converted to voltage.
    - Pressure — the analog value from A2 is converted to voltage and then to kPa using the sensor's offset and scaling factor.
    - Temperature — read directly from the SHT21 via I^2C.
- TDS sampling
  - The TDS sensor is sampled every 40 milliseconds and stored in a circular buffer of 30 values.
  - This continuous sampling ensures a stable reading is always available when it is time to log.
- Logging every 10 seconds
  - Every 10 seconds the following happens:
    - The TDS buffer is processed using a median filter to remove outliers.
    - The filtered TDS voltage is temperature-compensated using the formula: `compVoltage = avgVoltage / (1.0 + 0.02 * (temp - 25.0))`
    - The compensated voltage is converted to ppm using a third-degree polynomial

calibration curve.
- The current date and time are fetched from the RTC.
- All values are printed to the Serial monitor.
- A new row is appended to log.csv on the SD card in semicolon-separated format.
- The file is closed immediately after writing to prevent data loss in case of power failure.

Median filter

The getMedianNum() function sorts a copy of the TDS buffer using bubble sort and returns the middle value. This effectively removes spike readings caused by electrical noise, giving a more accurate TDS measurement than a simple average would.

CSV output format

Each row in the log file contains:

```
Date ; Time ; Turbidity [V] ; Temperature [C] ; TDS [ppm] ; Voltage [V] ;
Pressure [kPa]
```

The file begins with sep=; which tells Microsoft Excel to automatically use semicolon as the column separator when opening the file.

Flowchart software

The software flowchart illustrates the automatic data logging process used in the Maris Habitats prototype. The process starts by checking whether the SD card is available. If the SD card is not detected, the program stops. If the SD card is working, the system continues by checking whether the RTC module is running. If the RTC is not available, the program also stops.

When both the SD card and RTC module are ready, the software creates or opens the log.csv file. The program then checks the switch state. If the switch is off, logging is paused. If the switch is on, the system reads the connected sensors. The program then checks whether 10 seconds have passed since the last logging cycle. If not, the system continues reading sensor values.

When the logging interval has passed, the software retrieves the current time from the RTC module and writes the timestamped sensor data to the SD card. After the data is saved, the program returns to the switch check and repeats the process continuously. This flow ensures that the prototype automatically collects and stores environmental data in a structured way. Figure 73 shows the software flowchart of the Maris Habitats prototype.

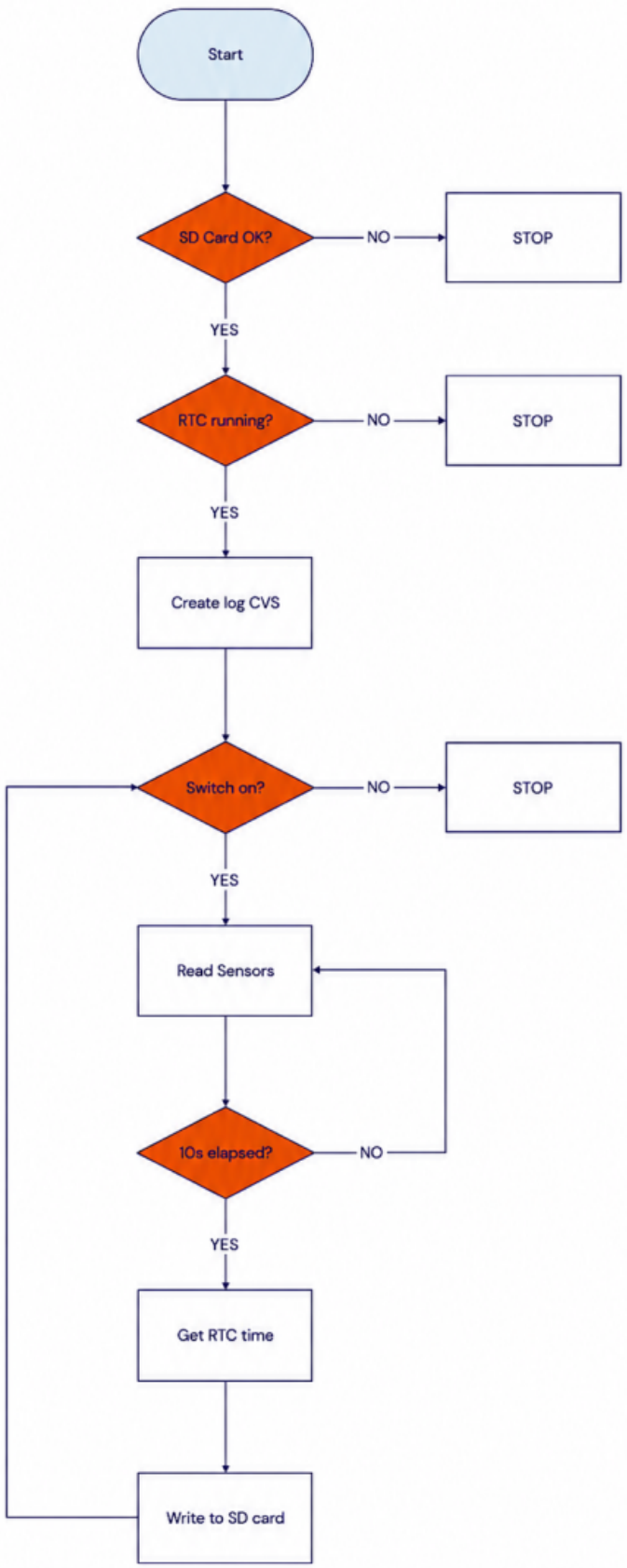
Maris Habitat Prototype Flow Chart
Start
SD Card OK?
NO
STOP
YES
RTC running?
NO
STOP
YES
Create log CVS
Switch on?
NO
STOP
YES
Read Sensors
10s elapsed?
NO
YES
Get RTC time
Write to SD card

Figure 73: Software flow chart

7.6.4 Tests & Results

7.6.4.1 Hardware tests

The purpose of the prototype testing is to verify that the Maris Habitats prototype performs its basic functions under controlled surface conditions. The prototype is not intended for underwater deployment or long-term marine testing. Therefore, the tests focus on validating the electronic system, sensor response, data logging, power supply, removable smartlogger concept, and basic structural handling above the water surface.

Since the prototype cannot be tested underwater, all tests are carried out under controlled surface conditions. The sensor system is tested using air exposure, manual handling, and separate water samples where relevant. The complete prototype is not submerged. A test is marked as Pass when the function operates as expected during the controlled test. A test is marked as Fail if the component does not respond, gives unreasonable values, stops operating, or cannot be used as intended.

Functionality	**Test Result**
Arduino powers on correctly when connected to the battery or power supply	Pass
Arduino reads data from all connected sensors without system errors	Pass
Temperature sensor responds to temperature changes in air or by touching the sensor with a warmer or cooler object	Pass
TDS sensor gives different readings when tested in separate water samples, such as clean water and saltwater, without submerging the full prototype	Pass
Pressure sensor gives a measurable response when pressure is applied manually or through a controlled surface-level test setup	Pass
Turbidity sensor detects changes when an object interrupts the sensing node	Pass
SD card module creates a readable data file	Pass
Sensor values are stored correctly on the SD card	Pass
Each data entry follows the expected format, including sensor name, sensor value, and time or measurement number	Pass
The battery or power supply can run the prototype during the full test period	Pass
The physical structure remains stable during handling and surface-level demonstration	Pass
The prototype demonstrates the basic concept of a removable monitoring unit combined with a habitat structure	Pass

These tests are intended to validate the proof-of-concept prototype only. They do not verify long-term underwater durability, waterproofing, marine pressure resistance, or biological performance. These aspects must be tested in future development using a marine-grade final product.

7.6.4.2 Software tests

The software data logging function was tested using the prototype hardware in order to validate the same basic principle used in the final product. During the test, the Arduino software was uploaded to the microcontroller and used to read values from the connected sensors. The measured values were

then written to an SD card and checked afterwards on a computer.

The purpose of this test was to verify that the software could initialize the SD card module, create or open a data file, collect sensor values, write the values in a readable format, and store the file correctly. The same values were also displayed in the Serial Monitor during testing, allowing the team to compare the live readings with the stored data.

The test confirmed that the software is able to perform local data logging. This means that the system can collect sensor data and save it on an SD card without using real-time communication. This supports the final product concept, where the smartlogger stores environmental data locally until it is retrieved during scheduled maintenance.

Figure 74 shows how the data stored on the SD card is presented in Excel.

	A	B	C	D	E	F	G
1	Date	Time	Turbidity [V]	Temperature [°C]	TDS [ppm]	Voltage [V]	Pressure [kPa]
2	3 06 2026	10:34:48	3.74	29.72	34	0.576	37.3
3	3 06 2026	10:34:58	3.75	29.77	35	0.571	35.3
4	3 06 2026	10:35:08	3.75	29.79	35	0.586	41.2
5	3 06 2026	10:35:18	3.73	29.88	35	0.566	33.4
6	3 06 2026	10:35:28	3.75	29.91	35	0.576	37.3
7	3 06 2026	10:35:38	3.91	29.89	34	0.576	37.3
8	3 06 2026	10:35:48	3.73	29.94	35	0.576	37.3
9	3 06 2026	10:35:58	3.76	30.02	35	0.571	35.3
10	3 06 2026	10:36:08	3.88	30.03	37	0.581	39.2
11	3 06 2026	10:36:18	3.91	30.06	35	0.571	35.3
12	3 06 2026	10:36:28	3.89	29.80	69	0.571	35.3
13	3 06 2026	10:36:38	3.90	29.77	69	0.581	39.2
14	3 06 2026	10:36:48	3.87	29.77	69	0.576	37.3
15	3 06 2026	10:36:58	3.86	29.78	69	0.581	39.2

Figure 74: Stored data in Excel

7.7 Summary

This chapter described the development of Maris Habitats from concept planning to prototype testing. The main focus of the development was to create a smart monitoring system that can read environmental data from a smartlogger and store the measurements locally. The physical reef structure was included as the supporting structure for the smartlogger, but the main technical purpose of the prototype was to validate the data collection and logging process.

The chapter presented the smart system, including the hardware, electronics, software and packaging. The smartlogger was designed as a separate unit containing the sensors, microcontroller, battery and SD card. This solution allows data collection and maintenance without removing the whole reef structure from the seabed. The software was developed to read sensor values and store the collected data locally on an SD card, making the system suitable for basic environmental monitoring without requiring continuous underwater communication.

The prototype was built as a simplified validation model rather than a final marine-grade product. It

was used to test the basic structure, electronic integration, sensor readings and data logging process under controlled conditions. The prototype helped confirm that the main technical logic of the system works, while also showing which parts would need further development before real underwater deployment.

Chapter 7 shows how Maris Habitats was transformed from a theoretical concept into a physical and functional prototype. The development process confirmed the feasibility of combining a modular reef structure with a removable monitoring system. Further development should focus on marine-grade materials, waterproofing, long-term durability, sensor accuracy and real environmental testing.

2026/02/16 21:11 · epsatisep · 0 Comments

8. Conclusions

This chapter summarizes the main outcomes of the Maris Habitats project. It presents the main achievements, the limitations of the current prototype, and the future development steps required before the system can be considered for real marine deployment.

8.1 Achievements

The Maris Habitats project resulted in the development of a modular artificial reef concept combined with an environmental monitoring system. The final concept consists of Reef Blocks and optional Smart Modules for local environmental data collection. This allows the system to provide both physical habitat support and long-term observation of marine conditions.

One of the main achievements was the development of a modular Reef Block structure. The design uses repeated concrete-based Reef Blocks that can be arranged in different configurations depending on the site, project size, and monitoring needs. This supports scalability and makes the system adaptable to different marine environments.

Another achievement was the integration of the monitoring concept. The Smartlogger was designed as a removable unit so that battery replacement, sensor inspection, maintenance, and data retrieval can be carried out without removing the whole Reef Block from the seabed. This supports long-term use and reduces unnecessary disturbance to the marine environment.

The team also developed and tested a simplified prototype under controlled conditions. The prototype focused on basic sensing, data logging, and electronic integration. Although it does not represent the final marine-grade product, it helped validate the basic technical logic of the system.

In addition, the project included material research, structural design review, sustainability analysis, ethical analysis, market analysis, and packaging development. These activities helped define Maris Habitats as a modular reef infrastructure and environmental monitoring solution rather than only a physical artificial reef product.

8.2 Limitations

Although the project achieved its main concept and prototype goals, several limitations remain. The prototype was tested only under controlled conditions and was not deployed in a real marine environment. Therefore, the results cannot yet prove long-term underwater performance, ecological impact, or full durability in harsh marine conditions.

The prototype also uses a simplified sensor set due to budget and component availability. The final product is intended to include more advanced sensors, such as pH and conductivity sensors, but these were not fully integrated into the prototype. For this reason, the current testing only validates part of the intended monitoring function.

Another limitation is related to waterproofing and pressure resistance. The final system would need a certified marine-grade enclosure, reliable underwater connectors, and long-term leak testing before real deployment. The prototype housing is useful for basic validation, but it is not suitable for deep or long-term marine use.

One limitation of the Smartlogger is that the system does not transmit data in real time. Since the data is stored locally on the SD card, the user cannot monitor the Smartlogger during operation to confirm whether it is still functioning correctly. This means that possible failures, such as sensor errors, SD card issues, or power loss, may only be discovered after the Smartlogger has been retrieved and the stored data has been checked. For future development, real-time status monitoring or a simple diagnostic signal could be considered to improve reliability and make it easier to detect problems during operation.

The structural analysis was also based on simulations and simplified assumptions. Although the results support the feasibility of the design, real physical testing would still be required to evaluate stability, impact resistance, seabed interaction, and long-term material degradation. Marine structures can be affected by seawater exposure, chloride and sulfate attack, corrosion processes, and wave action over time **[150]**.

The ecological effect of the Reef Blocks has not yet been tested. The project can only claim that the structure may support habitat formation over time. Real ecological success would require long-term field observation, baseline comparison, and cooperation with marine experts. Artificial reef projects require careful site selection, suitable design, and long-term monitoring before their ecological performance can be evaluated **[151]**.

8.3 Personal Outcomes

The EPS@ISEP programme contributed to the development of key professional competencies, as evidenced by the students' written testimonies. Participants reported improved ability to work in multicultural teams, enhancing communication skills and intercultural awareness. These accounts also indicate the development of project management and organisational skills, including task coordination, structured problem-solving, and adherence to deadlines. The application of practical methods, such as planning and continuous monitoring, supported effective teamwork throughout the project. In addition, the team perceived improvements in technical and presentation skills, including design capabilities and the ability to communicate and defend technical results. Overall, these outcomes highlight the acquisition of competencies relevant to international and multidisciplinary engineering practice.

8.4 Future Development

Future development should first focus on improving and validating the Smartlogger system. The electronic components should be integrated into a more robust marine-grade Smartlogger housing with reliable waterproofing, pressure resistance, and corrosion protection. The sensor system should also be expanded to include the final intended parameters, such as pH and conductivity.

Further testing is also needed for the power system. Battery life should be tested under realistic measurement cycles, and the energy consumption of the full system should be confirmed. This is important because the system is designed for long-term local data logging and scheduled maintenance.

The Reef Block structure should also be tested further. Future work should include physical stability tests, impact tests, and material durability tests in seawater. The connection between the Reef Block, Smartlogger attachment, and Smartlogger should be checked carefully to make sure that the system remains stable and safe during deployment.

Another important future step is field testing. A small pilot installation in a controlled marine environment would allow the team to collect real environmental data, observe biofouling, evaluate maintenance needs, and study how marine organisms interact with the Reef Blocks over time. Since marine sensors can be affected by biofouling, regular inspection, cleaning, and calibration should be considered during future testing **[152]**.

Future development should also include clearer data management procedures. The team should define how data is stored, documented, validated, and interpreted before it is used in reports or decision-making. For ocean data projects, data management planning is recommended to ensure that collected data is properly stored, preserved, and documented **[153]**.

Future work should involve stronger collaboration with public authorities, research institutions, environmental NGOs, and marine infrastructure partners. These stakeholders would be important for site selection, permits, environmental assessment, deployment, and long-term monitoring.

Maris Habitats provides a useful foundation for a modular reef infrastructure and environmental monitoring system. However, before real deployment, the concept must be further validated through marine-grade engineering, long-term testing, and ecological monitoring. These steps are necessary to help make the system safe, reliable, and useful for marine restoration and environmental observation.

2026/02/16 21:12 · epsatisep · 0 Comments

9. Acknowledgements

2026/02/16 22:33 · epsatisep · 0 Comments

10. Bibliography

https://www.eps2026-wiki4.dee.isep.ipp.pt/doku.php?id=refnotes:bib

[1], **[5]**, **[122]** V. Fiore, T. Scalici, G. Di Bella, A. Valenza, 2015. A review on basalt fibre and its composites. *Composites Part B: Engineering*, 74, pp.74-94, ISSN 1359-8368.
[2], **[59]**, **[66]**, **[125]**, **[133]**, **[140]**, **[150]** Fulin Qu, Wengui Li, Wenkui Dong, Vivian W.Y. Tam, Tao Yu, 2021. Durability deterioration of concrete under marine environment from material to structure: A critical review. *Journal of Building Engineering*, 35, pp.102074, ISSN 2352-7102.
[3], **[74]**, **[75]** Nicholas A. J. Graham, Kirsty L. Nash, 2013. The importance of structural complexity in coral reef ecosystems. *Coral Reefs*, 32, pp.315–326.
[4] Florida Department of Environmental Protection, 2024. *Osborne Reef Waste Tire Removal Project.*
[6], **[111]**, **[130]**, **[132]**, **[138]**, **[151]** National Oceanic, Atmospheric Administration, 2007. *National Artificial Reef Plan (as Amended): Guidelines for Siting, Construction, Development, and Assessment of Artificial Reefs.*
[7] Polycase, 2020. *IP68 Waterproof Rating.*
[8], **[22]**, **[31]**, **[107]** Reef Design Lab, 2026. *REEF DESIGN LAB: Artificial Reefs and Marine Infrastructure.*
[9] SECORE, 2026. *SECORE uses in vitro fertilization for coral reef conservation.*
[10], **[23]**, **[24]** Reef Design Lab, 2026. *Modular Artificial Reef Structure (MARS).*
[11] Eternal Reef
[12] Reef Innovations
[13] Reef Ball Foundation, n.d.. *Reefballorg, Curaçao Reef Ball Projects and Photos.*
[14], **[57]** Munandar, Mahendra, Muhammad Rizal, Chair Rani, Ahmad Faizal, 2018. The escalation of coral growth by biorock technology applied in Sabang marine ecotourism. *AACL Bioflux*, 11, pp.1633–1647.
[15] U.S. Fish, Wildlife Service Headquarters, 2008. *Biorock Reef Indonesia.jpg.*
[16], **[17]**, **[28]**, **[29]**, **[33]**, **[109]** rrreefs, 2026. *the rrreef system.*
[18] Living seawalls
[19] Living Seawalls, n.d.. *Design and Manufacturing.*
[20], **[21]** European Commission CORDIS, 2025. *Low-carbon bio-enhancing concrete turns ports into flourishing marine ecosystems.*
[25], **[27]**, **[32]**, **[108]** *IntelliReefs.*
[26] IntelliReefs, 2026. *Using Nanotechnology to Create Oceanite.*
[30], **[106]** *ECOncrete.*
[34], **[35]**, **[37]** E. G. Knoester, A. Vos1, C. Saru, A. J. Murk1, R. Osinga, 2024. Concrete evidence: Outplanted corals for reef restoration do not need extended curing of ordinary Portland cement. *Royal Society Open Science*, 11, pp.1-7.
[36] New Heaven Reef Conservation, 2018. *Artificial Reefs: What Works and What Doesn't?.*
[38], **[39]**, **[41]** Mohammed Al-Yaari, Muhd Afiq Hizami Abdullah, Mugahed Amran, Nurul Ain Harmiza Abdullah, Ibrahim Dubdub, Ammar Fayez Al-Shayeb, 2026. Innovative development of self-healing high-strength concrete using a polymeric air-entraining agent and Bacillus sphaericus: durability performance in aggressive saline environments. *Reviews on Advanced Materials Science*, 37, na, ISSN na.
[40] M.P Prajeesha, S. Packialakshmi, 2026. Study of Bacterial Concrete Corrosion Resistance in Marine Environment. *SSRG International Journal of Civil Engineering*, 13, pp.149-165, ISSN 2348-8352.
[42], **[43]**, **[44]**, **[45]**, **[46]**, **[58]**, **[65]**, **[137]** Jalal El Bahaoui, Issam Hanafi, Mohamed Chairi, Federica Favaloro, Chiara Borsellino, Guido Di Bella, 2025. Effect of Manufacturing Processes on Basalt Fiber-Reinforced Composites for Marine Applications. *Journal of Composites Science*, 9, pp.233.
[47], **[48]**, **[49]**, **[50]** Canhua Lai, Peng Zhang, Xiaobing Dai, Yuanxun Zheng, 2026. Prediction of Impact Resistance of Nano-SiO2 and Hybrid Fiber Modified Geopolymer Gel Concrete in Marine Wet–Thermal and Chloride Salt Environment. *MDPI Materials*.
[51], **[52]**, **[110]**, **[123]**, **[134]** Blue is the new green – Ecological enhancement of concrete based coastal and marine infrastructure. *Ecological Engineering*, 84, 2015, pp.260-272, ISSN 0925-8574.

[53], **[54]**, **[55]**, **[56]** Michelle Daarol, Cyril Jane Fullido, Earl Jhon Lazaga, Kyla Marie Ayodoc, 2026. Recycled Glass as Partial Replacement for Fine Aggregates in Concrete for Marine Structure Application. *E3S Web of Conferences*, 694, pp.01002, ISSN 2267-1242.
[60] Sculpey, n.d.. *How to Bake Polymer Clay.*
[61] Sculpey, 2021. *Everything You Need to Know About Oven-Bake Clay.*
[62], **[118]** Hao-Tian Li, Ya-Jun Wang, Jian-Bao Zhang, Peng Yu, Yi-Tong Wang, Jun-Guo Li, Shu-Hao Zhang, Zi-Han Tang, Jie Yang, 2026. Research Progress and the Prospect of Artificial Reef Preparation and Its Impact on the Marine Ecological Environment. *Materials*, 19, pp.447.
[63], **[67]** Prusa Research, n.d.. *PLA.*
[64] UltiMaker, n.d.. *PLA 3D Printing Material.*
[68], **[69]**, **[71]**, **[72]**, **[73]** Bichitra Nanda Sahoo, Peter James Thomas, Paul Thomas, Martin Møller Greve, 2025. Antibiofouling Coatings For Marine Sensors: Progress and Perspectives on Materials, Methods, Impacts, and Field Trial Studies. *ACS Sensors*, 10, pp.1600-1619.
[70] EvoLogics, 2017. *S2CR 42/65 Underwater Acoustic Communication System: Product Information.*
[76] PHAROS Project, 2024. *Artificial Reefs.*
[77] R. W Cockfield, 1987. *Scope management.*
[78] F. M Webster, 1994. *The WBS.*
[79] J. R. Beck, 1987. *Time management.*
[80] W. L. Dixon, 1987. *Quality Management.*
[81] D. Vogwell, 2003. *Stakeholder management.*
[82] Minois,N., 2025. *The Importance of Communication in Project Management.*
[83], **[84]** N Lavanya, Malarvizhi,T, 2008. *Risk analysis and management.*
[85] World Bank, 2017. *What is the Blue Economy?.*
[86], **[90]**, **[129]**, **[131]** Gianna Fabi, Giuseppe Scarcella, Alessandra Spagnolo, Stephen A. Bortone, Eric Charbonnel, Juan J. Goutayer, Naoufel Haddad, Altan Lok, Michel Trommelen, 2015. Studies and reviews, practical guidelines for the use of artificial reefs in the mediterranean and the black sea. , 96, pp.74-94, ISSN 1020-9549.
[87], **[89]**, **[91]** Carolina Bracho-Villavicencio, Helena Matthews-Cascon, Sergio Rossi, 2023. Artificial Reefs around the World: A Review of the State of the Art and a Meta-Analysis of Its Effectiveness for the Restoration of Marine Ecosystems. *Environments*, 10, pp.121.
[88] FAO, 2024. The State of World Fisheries and Aquaculture 2024 - Blue Transformation in action. Rome.. *Food and Agriculture Organization of the United Nations.*, ISSN 978-92-5-138763-4.
[92], **[100]** European Commission, 2024. *Nature Restoration Law Enters into Force.*
[93] United Nations, 2026. *Agreement on Marine Biological Diversity of Areas beyond National Jurisdiction.*
[94] Infrastructure European Climate, Environment Executive Agency, n.d.. *LIFE Environment Sub-programme.*
[95] European Commission, 2026. *Horizon Europe Work Programme: 2026 Topics for the Mission Restore our Ocean and Waters.*
[96] Global Environment Facility, 2022. *GEF-8 Replenishment.*
[97] Fundación Biodiversidad, 2025. *Call for Grants from the Pleamar 2025 Programme.*
[98] Fundación Biodiversidad, n.d.. *Empleaverde Programme.*
[99] European Commission, 2023. *InvestEU: EUR 28 Million for the First Blue Economy Instrument in Portugal.*
[101], **[102]**, **[103]** WWF European Policy Office, 2025. *10 Key Principles for Effective Marine and Coastal Restoration: Setting the Scene for Success in the EU.*
[104] European Commission, n.d.. *Biodiversity Strategy for 2030.*
[105] XOCEAN, n.d.. *Ocean Data, Delivered.*
[112], **[141]**, **[153]** Intergovernmental Oceanographic Commission of UNESCO, 2025. *Guidelines for an Ocean Project or Programme Data Management Plan.*
[113] OpenStax, 2023. *Principles of Marketing: Pricing Strategies for New Products.*

[114] Paddle, 2021. *Tiered Pricing Strategy: Definition, Examples and Benefits.*
[115], **[116]** Ellen MacArthur Foundation, 2021. *The Circular Economy System Diagram (Butterfly Diagram).*
[117] DipNDive, 2023. *The Ethical Debate Around Artificial Reefs: Conservation or Tourism Ploy?.*
[119] Andrew Deutza, Geoffrey M. Healb, Rose Niuc, Eric Swansonc, Terry Townshendc, Zhu Lic, Alejandro Delmard, Alqayam Meghjid, Suresh A. Sethid, John Tobin-de la Puente, 2020. Financing Nature: Closing the Global Biodiversity Financing Gap. *Paulson Institute*, na, na.
[120] Robert Costanza, Rudolf de Groot, Paul Sutton, Sander van der Ploeg, Sharolyn J. Anderson, Ida Kubiszewski, Stephen Farber, R. Kerry Turner, 2014. Changes in the global value of ecosystem services. *Global Environmental Change*, 26, pp.152-158.
[121] United Nations, 2015. *Goal 17: Partnerships for the Goals.*
[124], **[136]** National Society of Professional Engineers, 2019. *NSPE Code of Ethics for Engineers.*
[126] European Commission, 2026. *Green Claims.*
[127] OECD, 2011. *Environmental Claims: Findings and Conclusions of the OECD Committee on Consumer Policy.*
[128] Federal Trade Commission, 2012. *Green Guides.*
[135], **[139]**, **[152]** L. Delauney, C. Compere, M. Lehaitre, 2010. Biofouling protection for marine environmental sensors. *Ocean Science*, 6, pp.503–511.
[142] Bluerobotics. *Bluerobotics BarXT.*
[143] Atlas Scientific. *Atlas Scientific Ph Probe.*
[144] Atlas Scientific. *Atlas Scientific Ph Module.*
[145], **[146]** NANUK, n.d.. *NANUK 935 Pro Photo Kit.*
[147] Foam Creations, n.d.. *What is EVA Foam and What Are Its Common Applications?.*
[148] European Pallet Association e.V., n.d.. *Load Carriers Overview.*
[149] Sandax GmbH, 2024. *Securing Loads on Pallets: An Indispensable Guide.*

From:
https://www.eps2026-wiki4.dee.isep.ipp.pt/ - **EPS@ISEP**

Permanent link:
https://www.eps2026-wiki4.dee.isep.ipp.pt/doku.php?id=report

Last update: **2026/05/28 11:15**